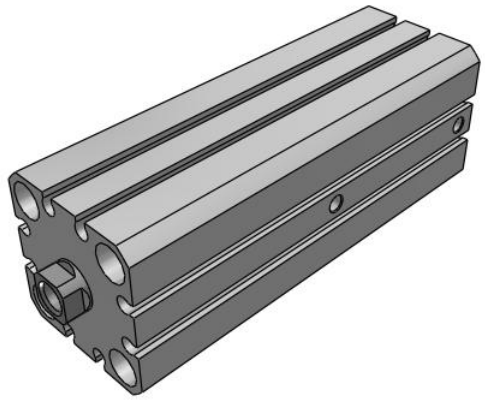

MK2T, Rotary Clamp Cylinder, Double Guide Type

MK2TB25-10R

Datasheet

General series information

- Larger allowable moment of inertia.
- Horizontal mounting is now possible.
- Anti-rotational and rotational accuracies improved.

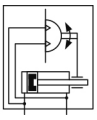

Rotary clamp cylinder

Standard specifications

Mounting	B (Through Hole/Both Ends Tapped Common (Standard)]
Bore Size	25 mm
Stroke	10 mm
Number	2 pcs. (Or None in Case of No Switch)
Lead Wire or Pre-wired Connector	0.5 m (Or None in the Case of No Switch)
Cylinder Port	M Thread: 20, 25 Bore; Rc: 32 to 63 Bore
Auto Switch	No Switch
X Options	None
Rotation	R (Right Rotation)
Body Option	Standard (Female Thread)
Maximum operating pressure	1 MPa
Minimum operating pressure	0.1 MPa
Proof pressure	1.5 Mpa
Maximum ambient temperature	Without auto switch: –10 to 70°C (No freezing) With auto switch: –10 to 60°C (No freezing)
Minimum ambient temperature	-10°
Type of cushioning	Rubber Bumper
Non-rotating accuracy of plate	±1.0°
Port size	M5 x 0.8
Lubrication	Non-lube

Specifications are subject to change without prior notice and any obligation on the part of the manufacturer.

SMC United Kingdom +34 945184126 sales@smc.uk

Fluid	Air
Stroke length tolerance	+ 1.0 0
Rotary stroke	19
Clamp stroke	10, 20
Theoretical clamp force (at 0.5 MPa.)	10, 21
Piston speed	50 - 200 mm/s
Rotation angle	90° ±5°
Weight	0.448 Kg

Specifications are subject to change without prior notice and any obligation on the part of the manufacturer.

SMC United Kingdom +34 945184126 sales@smc.uk

Dimensions

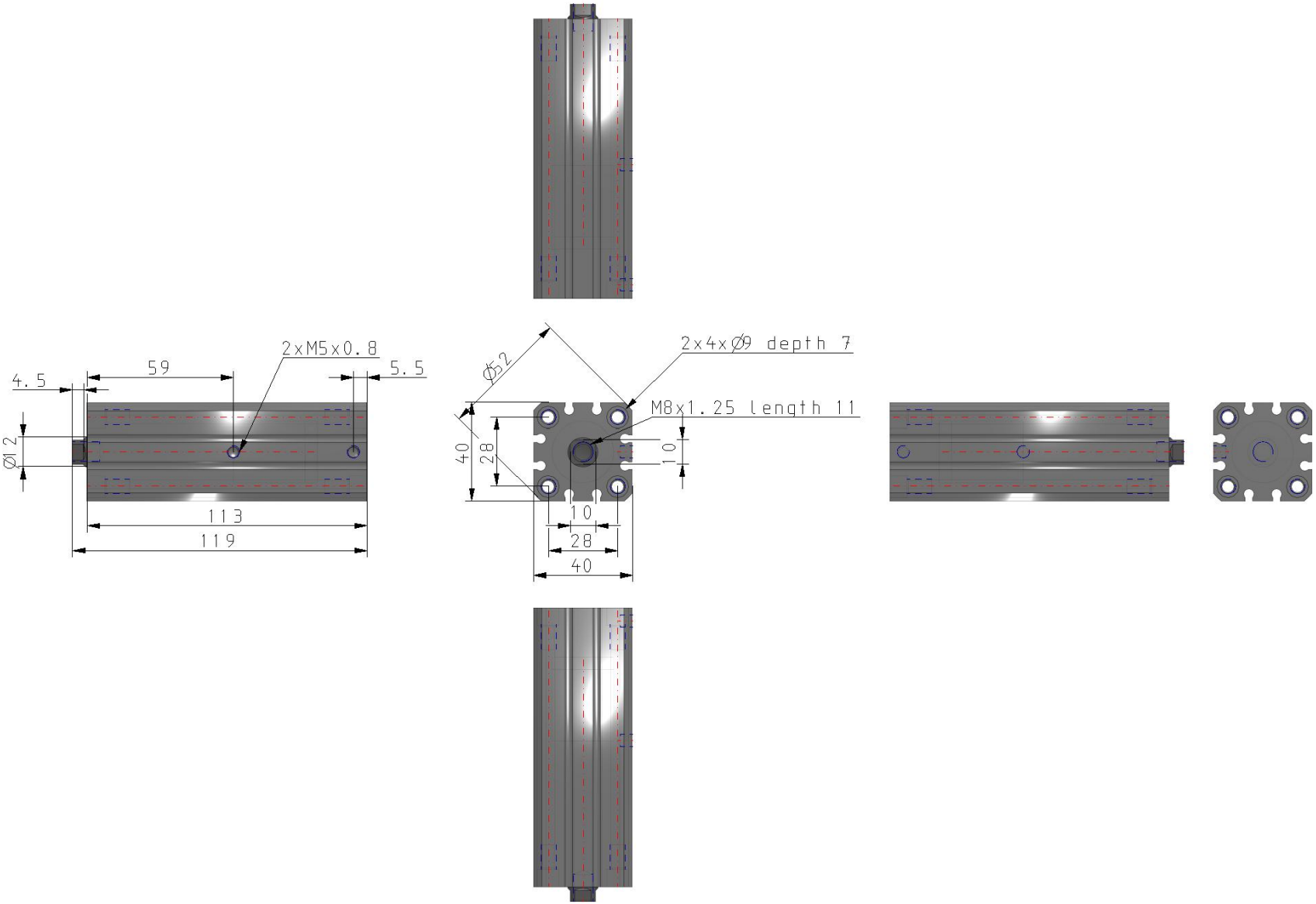

Specifications are subject to change without prior notice and any obligation on the part of the manufacturer.

Constructions

MK2T□20 to 63

With arm (N)

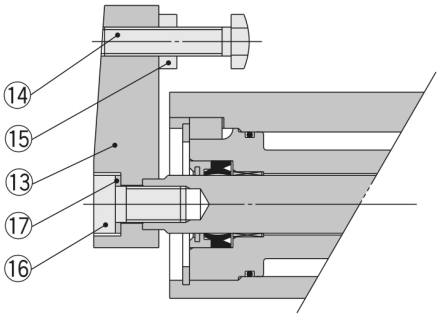

Head end flange (G)

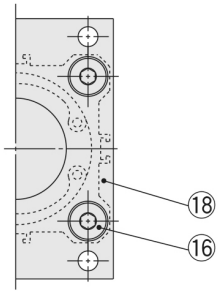

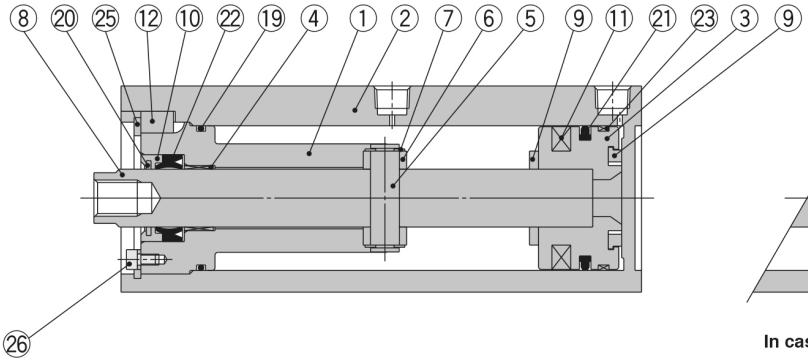

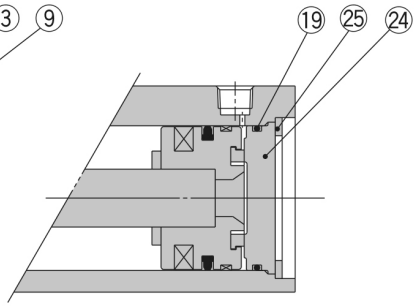

In case of clamp stroke 50 mm

Component Parts

No.	Description	Material	Note
1	**Rod cover**	Structural steel	Electroless nickel plated
2	**Cylinder tube**	Aluminium alloy	Anodic oxide coating
3	**Piston**	Aluminium alloy	Trivalent chromated
4	**Bushing**	Oil-impregnated sintered alloy	ø20, ø25
		Bronze casted	ø32 to ø63
5	**Guide shaft**	Stainless steel	ø20, ø25: Hard chrome plated
		Structural steel	ø32 to ø63: Hard chrome plated
6	**Guide roller**	Structural steel	
7	**Retaining ring**	Steel for special applications	ø20, ø25: Phosphate coating
			ø32 to ø63: Zinc trivalent chromated
8	**Piston rod**	Stainless steel	ø20, ø25: Hard chrome plated
		Structural steel	ø32 to ø63: Hard chrome plated
9	**Bumper**	Urethane	
10	**Seal retainer**	Aluminium alloy	Trivalent chromated
11	**Magnet**	—	
12	**Key**	Structural steel	Zinc trivalent chromated

Component Parts

No.	Description	Material	Note
13	**Arm**	Structural steel	Electroless nickel plated
14	**Clamp bolt**	Structural steel	Electroless nickel plated
15	**Hexagon nut**	Structural steel	Nickel plated
16	Hexagon socket head cap screw	Structural steel	Nickel plated
17	**Spring washer**	Steel wire	Nickel plated
18	**Flange**	Structural steel	Nickel plated
19	**Gasket**	NBR	
20	**Coil scraper**	Bronze	
21	**Piston seal**	NBR	
22	**Rod seal**	NBR	
23	**Wear ring**	Resin	
24	**Bottom plate**	Aluminium alloy	Anodic oxide coating
25	**Retaining ring**	Steel for special applications	Phosphate coating
26	**Hexagon socket head cap screw (with SW)**	Structural steel	Nickel plated (ø40 to ø63 only)
	Washer	Stainless steel	ø25, ø32 only
	Hexagon socket head cap screw	Structural steel	Nickel plated (ø25, ø32 only)

Specifications are subject to change without prior notice and any obligation on the part of the manufacturer.

SMC United Kingdom +34 945184126 sales@smc.uk

Additional information

Catalogue	MK-Fa_EU.pdf

Specifications are subject to change without prior notice and any obligation on the part of the manufacturer.

SMC United Kingdom +34 945184126 sales@smc.uk