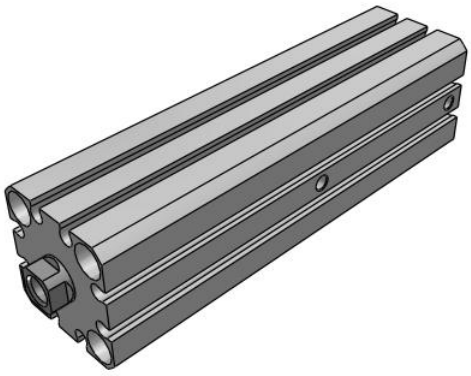

# MK2T, Rotary Clamp Cylinder, Double Guide Type

## MK2TB20-20R

Datasheet

## General series information

- Larger allowable moment of inertia.
- Horizontal mounting is now possible.
- Anti-rotational and rotational accuracies improved.

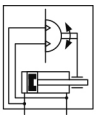

*Rotary clamp cylinder*

## Standard specifications

| | |
|---|---|
| Mounting | B (Through Hole Both Ends Tapped Common) |
| Bore Size | 20 mm |
| Stroke | 20 mm |
| Lead Wire or Prewired Connector | 0.5 m (Or None in the Case of No Switch) |
| X Option | None |
| Number | 2 pcs. (Or None in the Case of No Switch) |
| Cylinder Port | M Thread: 20, 25 Bore; Rc: 32 to 63 Bore |
| Auto Switch | No Switch |
| Rotation | R (Right Rotation) |
| Body Option | Standard (Female Thread) |
| Maximum operating pressure | 1 MPa |
| Minimum operating pressure | 0.1 MPa |
| Proof pressure | 1.5 Mpa |
| Maximum ambient temperature | Without auto switch: –10 to 70°C (No freezing)<br>With auto switch: –10 to 60°C (No freezing) |
| Minimum ambient temperature | -10° |
| Type of cushioning | Rubber Bumper |
| Non-rotating accuracy of plate | ±1.0° |
| Port size | M5 x 0.8 |
| Lubrication | Non-lube |

Specifications are subject to change without prior notice and any obligation on the part of the manufacturer.



SMC United Kingdom +34 945184126 sales@smc.uk

| | |
|---|---|
| Fluid | Air |
| Stroke length tolerance | + 1.0<br>0 |
| Rotary stroke | 19 |
| Clamp stroke | 10, 20 |
| Theoretical clamp force (at 0.5 MPa.) | 10, 20 |
| Piston speed | 50 - 200 mm/s |
| Rotation angle | 90° ±5° |
| Weight | 0.390 Kg |

Specifications are subject to change without prior notice and any obligation on the part of the manufacturer.



SMC United Kingdom +34 945184126 sales@smc.uk

# Dimensions

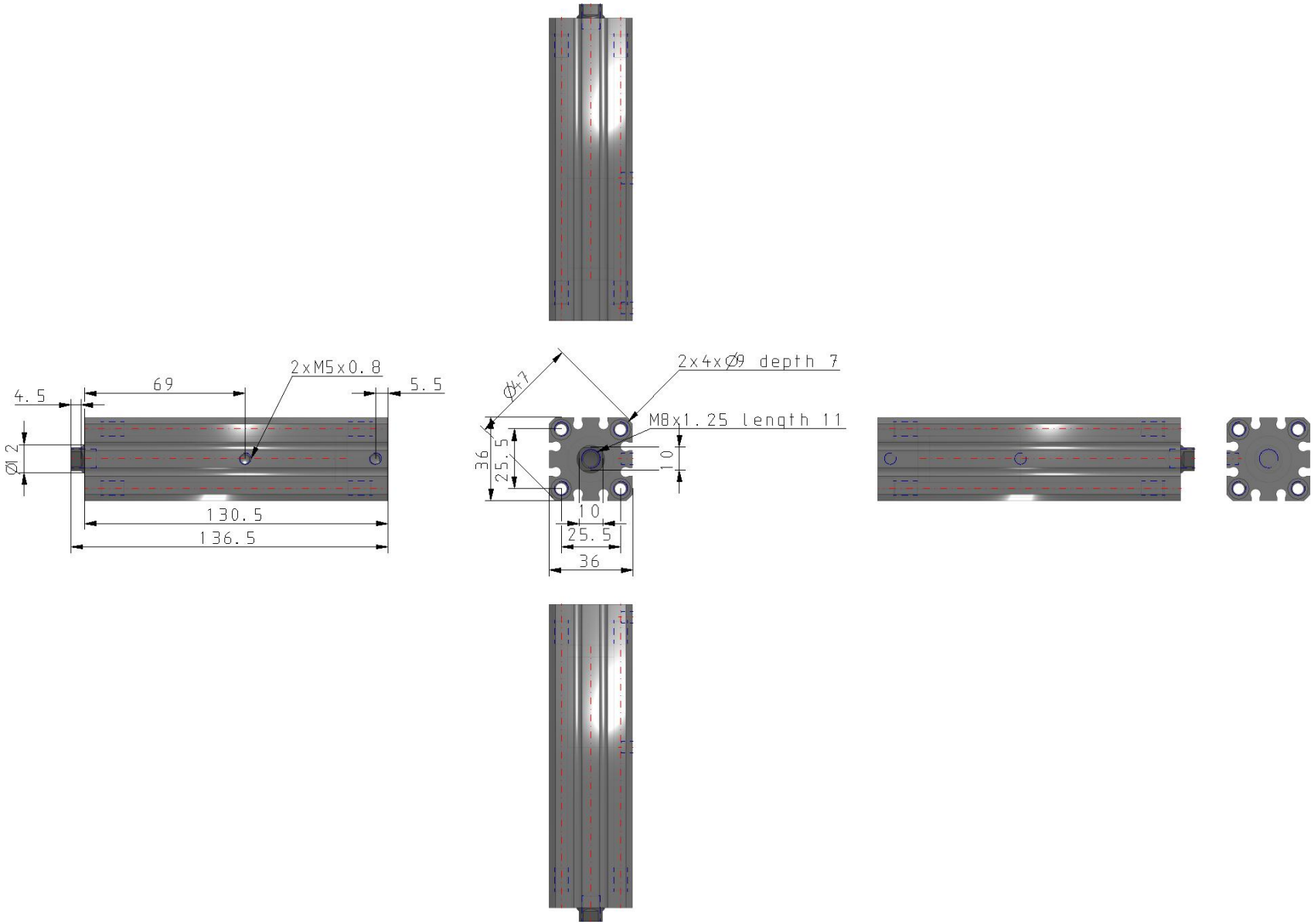


Specifications are subject to change without prior notice and any obligation on the part of the manufacturer.

# Constructions

**MK2T□20 to 63**

**With arm (N)**

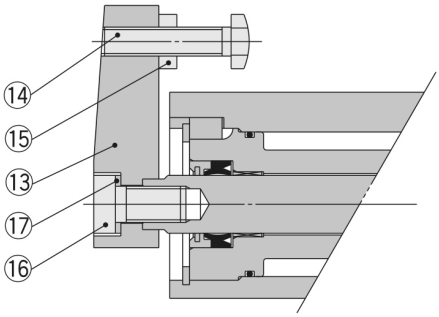


**Head end flange (G)**

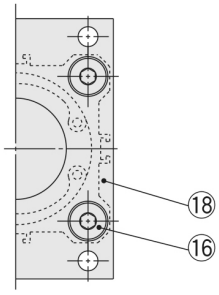


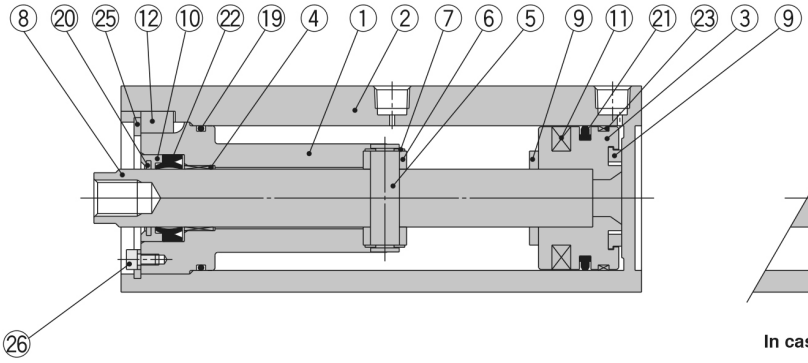


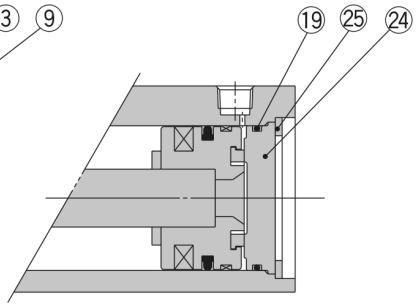


**In case of clamp stroke 50 mm**

## Component Parts

| No. | Description | Material | Note |
|---|---|---|---|
| 1 | **Rod cover** | Structural steel | Electroless nickel plated |
| 2 | **Cylinder tube** | Aluminium alloy | Anodic oxide coating |
| 3 | **Piston** | Aluminium alloy | Trivalent chromated |
| 4 | **Bushing** | Oil-impregnated sintered alloy | ø20, ø25 |
| | | Bronze casted | ø32 to ø63 |
| 5 | **Guide shaft** | Stainless steel | ø20, ø25: Hard chrome plated |
| | | Structural steel | ø32 to ø63: Hard chrome plated |
| 6 | **Guide roller** | Structural steel | |
| 7 | **Retaining ring** | Steel for special applications | ø20, ø25: Phosphate coating |
| | | | ø32 to ø63: Zinc trivalent chromated |
| 8 | **Piston rod** | Stainless steel | ø20, ø25: Hard chrome plated |
| | | Structural steel | ø32 to ø63: Hard chrome plated |
| 9 | **Bumper** | Urethane | |
| 10 | **Seal retainer** | Aluminium alloy | Trivalent chromated |
| 11 | **Magnet** | — | |
| 12 | **Key** | Structural steel | Zinc trivalent chromated |

## Component Parts

| No. | Description | Material | Note |
|---|---|---|---|
| 13 | **Arm** | Structural steel | Electroless nickel plated |
| 14 | **Clamp bolt** | Structural steel | Electroless nickel plated |
| 15 | **Hexagon nut** | Structural steel | Nickel plated |
| 16 | Hexagon socket head cap screw | Structural steel | Nickel plated |
| 17 | **Spring washer** | Steel wire | Nickel plated |
| 18 | **Flange** | Structural steel | Nickel plated |
| 19 | **Gasket** | NBR | |
| 20 | **Coil scraper** | Bronze | |
| 21 | **Piston seal** | NBR | |
| 22 | **Rod seal** | NBR | |
| 23 | **Wear ring** | Resin | |
| 24 | **Bottom plate** | Aluminium alloy | Anodic oxide coating |
| 25 | **Retaining ring** | Steel for special applications | Phosphate coating |
| 26 | **Hexagon socket head cap screw (with SW)** | Structural steel | Nickel plated (ø40 to ø63 only) |
| | **Washer** | Stainless steel | ø25, ø32 only |
| | Hexagon socket head cap screw | Structural steel | Nickel plated (ø25, ø32 only) |

*Specifications are subject to change without prior notice and any obligation on the part of the manufacturer.*



SMC United Kingdom +34 945184126 sales@smc.uk

## Additional information

Catalogue MK_MK2_EU.pdf

Specifications are subject to change without prior notice and any obligation on the part of the manufacturer.



SMC United Kingdom +34 945184126 sales@smc.uk