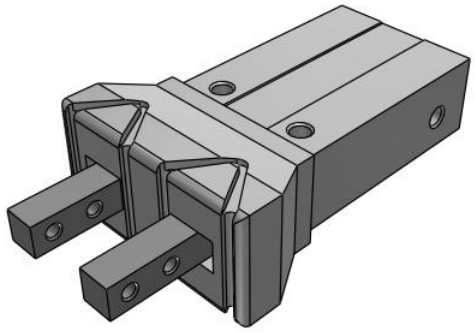

With Dust Cover - MHZJ2
MHZJ2-6C

Datasheet

General series information

- Maximum gripping force per finger 104 N at 0.5 MPa
- Double acting and single acting
- Repeatability: ±0.01 mm
- Max. operating frequency: 120 c.p.m.

Gripper, normally closed, single-acting with permanent magnet on piston

Standard specifications

Bore Size	6 mm
Action	C (Single Acting (N.C.))
Body Option	Basic Style
Dust Cover	Chloroprene Rubber (CR)
Auto Switch	No Switch
Lead Wire or Prewired Connector	0.5m (Or None in the Case of No Switch)
Number	2 pcs. (Or None in the Case of No Switch)
Maximum operating pressure	0.7 MPa
Minimum operating pressure	0.3 MPa
Maximum ambient temperature	60 ºC
Minimum ambient temperature	-10 ºC
Repeatability	± 0.01 mm
Weight	28 g
Lubrication	Non-lube
Effective holding force per finger, internal (0.5 MPa)	3.7 N
Fluid	Air
Max. operating frequency	180 c.p.m.
Stroke per gripper jaw	4 mm
Weight	0.028 Kg

Specifications are subject to change without prior notice and any obligation on the part of the manufacturer.

SMC CORPORATION Zuazobidea 14, 01012, Vitoria-Gasteiz, Álava +34 945184100 +34 945184126 www.smc.eu emcmarketing@smc.smces.es

Dimensions

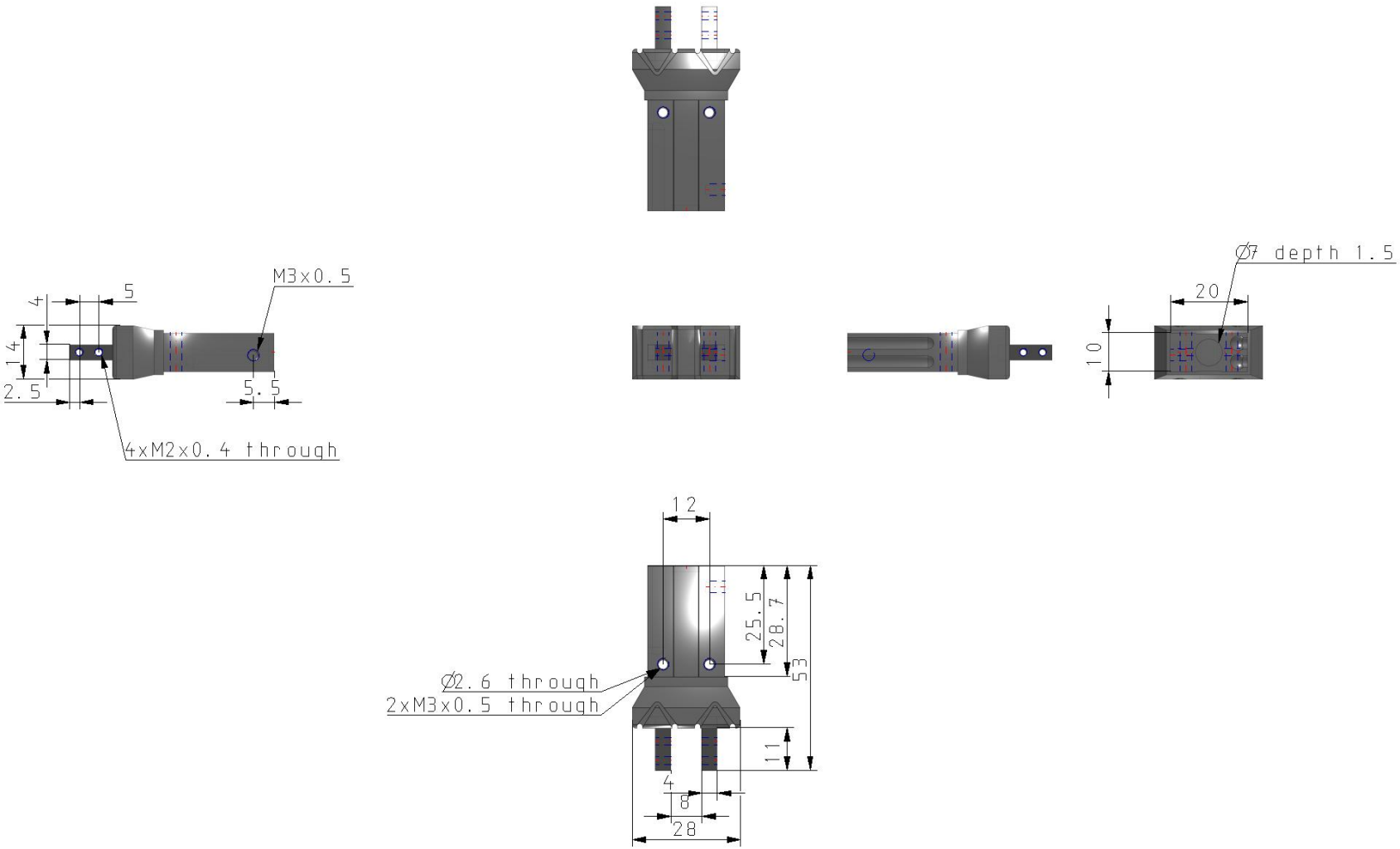

Specifications are subject to change without prior notice and any obligation on the part of the manufacturer.

SMC CORPORATION Zuazobidea 14, 01012, Vitoria-Gasteiz, Álava +34 945184100 +34 945184126 www.smc.eu emcmarketing@smc.smces.es

Additional information

Catalogue	MHZ_EU.pdf
Operation manuals	OM_MHZJ2_OMC0050EN-A.pdf OM_MHZ2_OMD0047EN-A.pdf

Specifications are subject to change without prior notice and any obligation on the part of the manufacturer.

SMC CORPORATION Zuazobidea 14, 01012, Vitoria-Gasteiz, Álava +34 945184100 +34 945184126 www.smc.eu emcmarketing@smc.smces.es