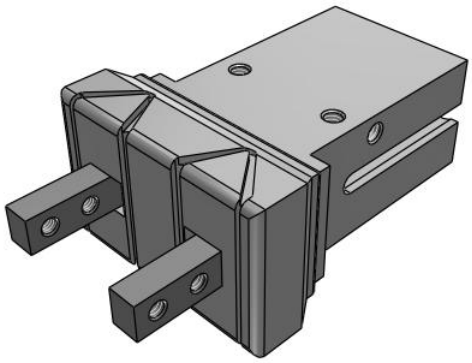

With Dust Cover - MHZJ2
MHZJ2-10SS

Datasheet

General series information

- Maximum gripping force per finger 104 N at 0.5 MPa
- Double acting and single acting
- Repeatability: ±0.01 mm
- Max. operating frequency: 120 c.p.m.

Gripper, normally open, single-acting with permanent magnet on piston

Standard specifications

Bore Size	10 mm
Action	S (Single Acting N.O.)
Body Option	Basic Type
Dust Cover	S (Silicone Rubber (SI))
Auto Switch	No Switch
Lead Wire or Pre-wired Connector	0.5 m (Or None in the Case of No Switch)
Number	2 pcs. (Or None in Case of No Switch)
Maximum operating pressure	0.7 MPa
Minimum operating pressure	0.35 MPa
Maximum ambient temperature	60 ºC
Minimum ambient temperature	-10 ºC
Repeatability	± 0.01 mm
Weight	60 g
Lubrication	Non-lube
Effective holding force per finger, external (0.5 MPa)	6.3 N
Fluid	Air
Max. operating frequency	180 c.p.m.
Stroke per gripper jaw	4 mm

Specifications are subject to change without prior notice and any obligation on the part of the manufacturer.

SMC CORPORATION Zuazobidea 14, 01012, Vitoria-Gasteiz, Álava +34 945184100 +34 945184126 www.smc.eu support.marketingeurope@smc.com

Dimensions

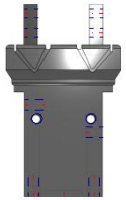

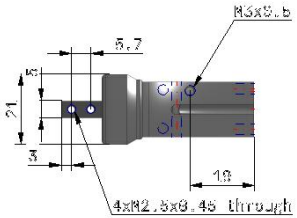

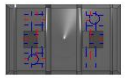

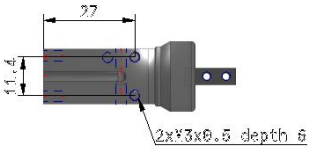

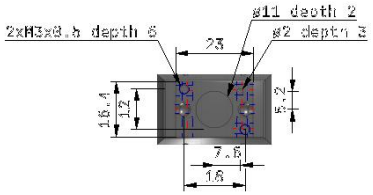

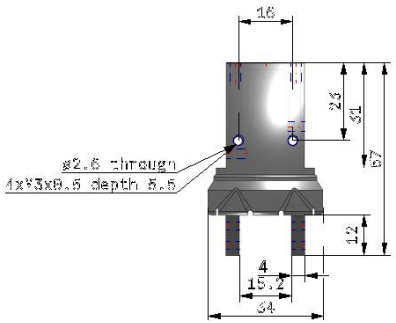

Specifications are subject to change without prior notice and any obligation on the part of the manufacturer.

SMC CORPORATION Zuazobidea 14, 01012, Vitoria-Gasteiz, Álava +34 945184100 +34 945184126 www.smc.eu support.marketingeurope@smc.com

Additional information

Catalogue	MHZ_EU.pdf
Operation manuals	OM_MHZJ2_OMC0050EN-A.pdf OM_MHZ2_OMD0047EN-A.pdf

Specifications are subject to change without prior notice and any obligation on the part of the manufacturer.

SMC CORPORATION Zuazobidea 14, 01012, Vitoria-Gasteiz, Álava +34 945184100 +34 945184126 www.smc.eu support.marketingeurope@smc.com