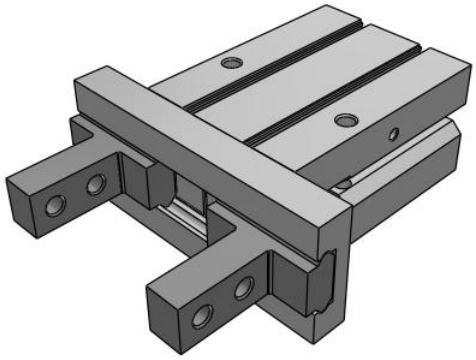

Standard - MHZ2
MHZ2-40S

Datasheet

General series information

- Maximum gripping force per finger 43.5 N at 0.5 MPa
- Double acting and single acting
- Repeatability: ±0.01mm
- Max. operating frequency: 180 c.p.m.

Gripper, normally open, single-acting with permanent magnet on piston

Standard specifications

Bore Size	40 mm
Action	S (Single Acting (N.O.))
Number	2 pcs. (Or None in Case of No Switch)
Finger Position	Standard
Lead Wire or Pre-wired Connector	0.5 m (Or None in the Case of No Switch)
Auto Switch	No Switch
Body Option	Basic Type
Pressure medium	Air
Maximum temperature of pressure medium	60 ºC
Minimum temperature of pressure medium	-10 ºC (No freezing)
Maximum operating pressure	0.7 MPa
Minimum operating pressure	0.25 MPa
Maximum ambient temperature	60 ºC
Minimum ambient temperature	-10 ºC (No freezing)
Pneumatic input connection	M5
Pneumatic exhaust connection	M5
Repeatability	± 0.02 mm
Lubrication	Non-lube
Type of gripper	Parallel

Specifications are subject to change without prior notice and any obligation on the part of the manufacturer.

SMC United Kingdom +34 945184126 sales@smc.uk

Number of pneumatic connections	1
Effective holding force per finger, external (0.5 MPa)	217 N
Number of fingers	2
Mode of operation	Single acting, normally open
Maximum operating frequency	60 c.p.m.
Opening / closing stroke (both sides)	30 mm
Weight	1.370 Kg

Specifications are subject to change without prior notice and any obligation on the part of the manufacturer.

SMC United Kingdom +34 945184126 sales@smc.uk

Dimensions

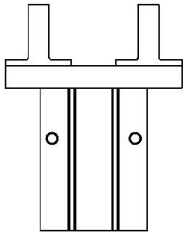

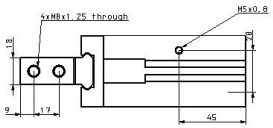

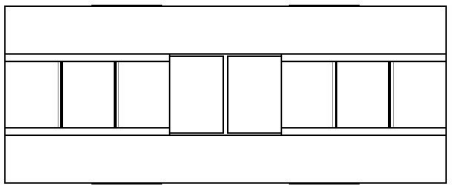

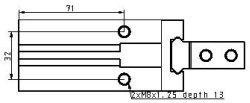

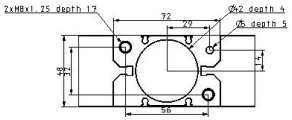

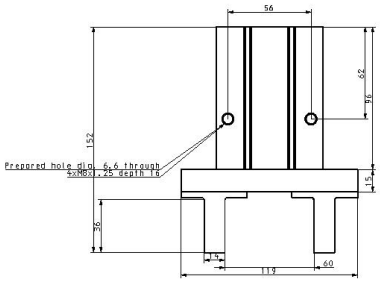

Specifications are subject to change without prior notice and any obligation on the part of the manufacturer.

SMC United Kingdom +34 945184126 sales@smc.uk

Constructions

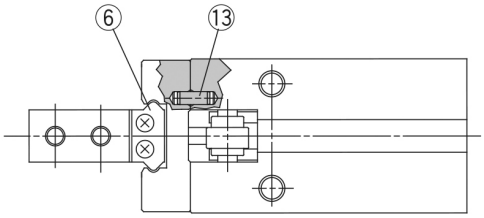

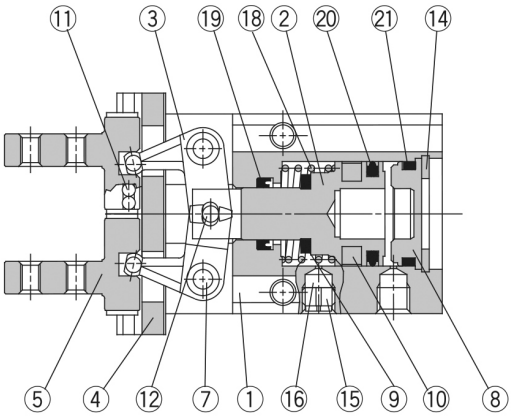

Parts list

No.	Description	Material	Note
1	**Body**	Aluminum alloy	Hard anodized
2	**Piston**	ø10, ø16: Stainless steel ø20 to ø40: Aluminum alloy	ø20 to ø40: Hard anodized
3	**Lever**	Stainless steel	Heat treated
4	**Guide**	Stainless steel	Heat treated
5	**Finger**	Stainless steel	Heat treated
6	**Roller stopper**	Stainless steel	
7	**Lever shaft**	Stainless steel	Nitrided
8	**Cap**	ø10 to ø25: Synthetic resin ø32, ø40: Aluminum alloy	ø32, ø40: Clear anodized
9	**Bumper**	Urethane rubber	
10	**Rubber magnet**	Synthetic rubber	

Parts list

No.	Description	Material	Note
11	**Steel balls**	High carbon chromium bearing steel	
12	**Needle roller**	High carbon chromium bearing steel	
13	**Parallel pin**	Stainless steel	
14	**C type snap ring**	Carbon steel	Nickel plated
15	**Exhaust plug A**	Brass	Electroless nickel plated
16	**Exhaust filter A**	Polyvinyl formal	
18	**N.C. spring**	Stainless steel spring wire	
19	**Rod seal**	NBR	
20	**Piston seal**	NBR	
21	**Gasket**	NBR	

Specifications are subject to change without prior notice and any obligation on the part of the manufacturer.

SMC United Kingdom +34 945184126 sales@smc.uk

Additional information

Catalogue	MHZ_EU.pdf
Operation manuals	OM_MHZ2_OMD0047EN-A.pdf

Specifications are subject to change without prior notice and any obligation on the part of the manufacturer.

SMC United Kingdom +34 945184126 sales@smc.uk