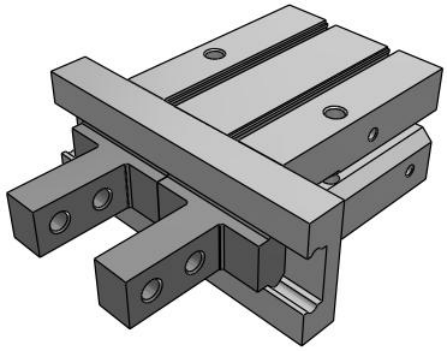

Standard - MHZ2
MHZ2-40D

Datasheet

General series information

- Maximum gripping force per finger 43.5 N at 0.5 MPa
- Double acting and single acting
- Repeatability: ±0.01mm
- Max. operating frequency: 180 c.p.m.

Gripper, external grip, double-acting with permanent magnet on piston

Standard specifications

Bore Size	40 mm
Action	D (Double Acting)
Lead Wire or Prewired Connector	0.5m (Or None in the Case of No Switch)
Number	2 pcs. (Or None in the Case of No Switch)
Finger Position	Standard
Auto Switch	No Switch
Body Option	Basic
Pressure medium	Air
Maximum temperature of pressure medium	60 ºC
Minimum temperature of pressure medium	-10 ºC (No freezing)
Maximum operating pressure	0.7 MPa
Minimum operating pressure	0.1 MPa
Maximum ambient temperature	60 ºC
Minimum ambient temperature	-10 ºC (No freezing)
Pneumatic input connection	M5
Pneumatic exhaust connection	M5
Repeatability	± 0.02 mm
Lubrication	Non-lube
Type of gripper	Parallel

Specifications are subject to change without prior notice and any obligation on the part of the manufacturer.

SMC United Kingdom +34 945184126 sales@smc.uk

Number of pneumatic connections	2
Effective holding force per finger, external (0.5 MPa)	254 N
Effective holding force per finger, internal (0.5 MPa)	318 N
Number of fingers	2
Mode of operation	Double acting
Maximum operating frequency	60 c.p.m.
Opening / closing stroke (both sides)	30 mm
Weight	1.275 Kg

Specifications are subject to change without prior notice and any obligation on the part of the manufacturer.

SMC United Kingdom +34 945184126 sales@smc.uk

Dimensions

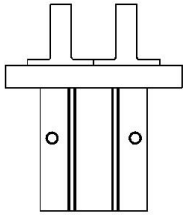

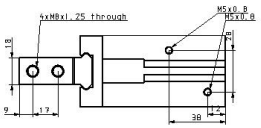

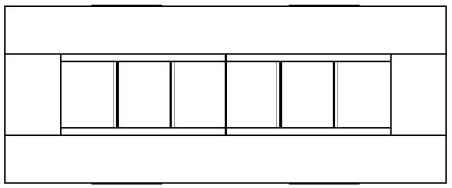

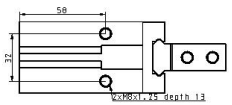

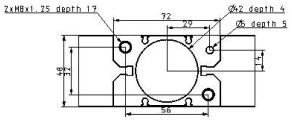

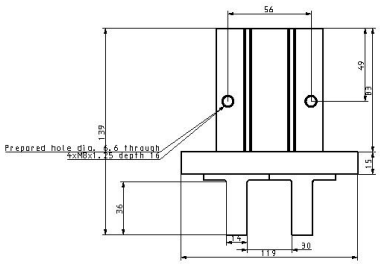

Specifications are subject to change without prior notice and any obligation on the part of the manufacturer.

Constructions

Fingers open

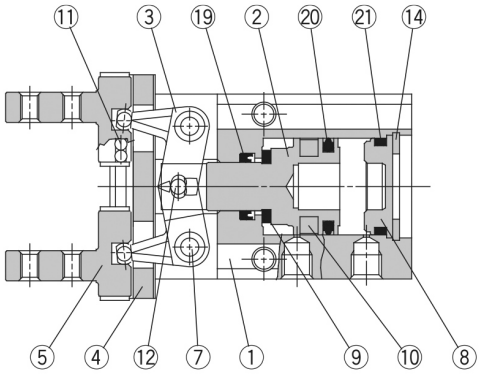

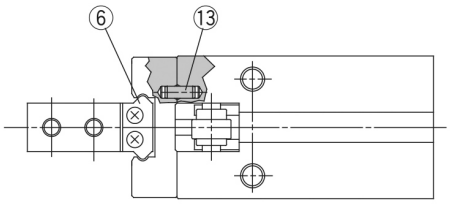

Fingers closed

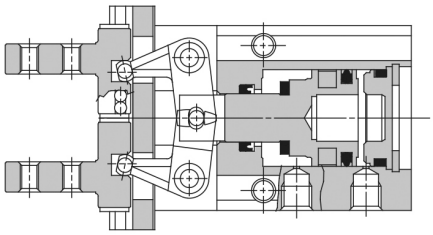

Parts list

No.	Description	Material	Note
1	**Body**	Aluminum alloy	Hard anodized
2	**Piston**	ø10, ø16: Stainless steel ø20 to ø40: Aluminum alloy	ø20 to ø40: Hard anodized
3	**Lever**	Stainless steel	Heat treated
4	**Guide**	Stainless steel	Heat treated
5	**Finger**	Stainless steel	Heat treated
6	**Roller stopper**	Stainless steel	
7	**Lever shaft**	Stainless steel	Nitrided
8	**Cap**	ø10 to ø25: Synthetic resin ø32, ø40: Aluminum alloy	ø32, ø40: Clear anodized
9	**Bumper**	Urethane rubber	
10	**Rubber magnet**	Synthetic rubber	

Parts list

No.	Description	Material	Note
11	**Steel balls**	High carbon chromium bearing steel	
12	**Needle roller**	High carbon chromium bearing steel	
13	**Parallel pin**	Stainless steel	
14	**C type snap ring**	Carbon steel	Nickel plated
19	**Rod seal**	NBR	
20	**Piston seal**	NBR	
21	**Gasket**	NBR	

Specifications are subject to change without prior notice and any obligation on the part of the manufacturer.

SMC United Kingdom +34 945184126 sales@smc.uk

Additional information

Catalogue	MHZ_EU.pdf
Operation manuals	OM_MHZ2_OMD0047EN-A.pdf

Specifications are subject to change without prior notice and any obligation on the part of the manufacturer.

SMC United Kingdom +34 945184126 sales@smc.uk