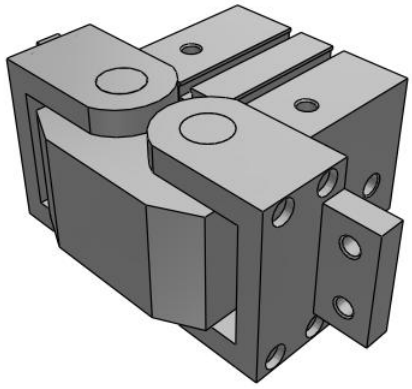

Rack & Pinion Style - MHW2
MHW2-40D1

Datasheet

General series information

- Maximum gripping moment 8.27 Nm at 0.5 MPa
- Finger opening angle from -6° to 180°
- Double acting
- Repeatability: ±0.2 mm
- Max. operating frequency: 60 c.p.m.

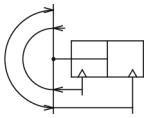

Angular gripper, cam style

Standard specifications

Bore Size	40 mm
Thread Type	Rc (or M Thread for 20 & 25 Bore)
Finger Option	1 (Opening/Closing Direction Tap Mounting)
Auto Switch	No Switch
Lead Wire or Prewired Connector	0.5m (Or None in the Case of No Switch)
Number	2 pcs. (Or None in the Case of No Switch)
Maximum operating pressure	0.7 MPa
Minimum operating pressure	0.15 MPa
Maximum ambient temperature	60 ºC
Minimum ambient temperature	-10 ºC
F124- Max-operating-frequency	30 c.p.m
Repeatability	± 0.2 mm
Applicable fluid	Air
Lubrication	Non lube
Effective holding force per finger (0.5 MPa)	3.7 N m
Action	Double acting
Opening / closing stroke (both sides), closing	-5º
Opening / closing stroke (both sides), opening	180º

Specifications are subject to change without prior notice and any obligation on the part of the manufacturer.

SMC CORPORATION Zuazobidea 14, 01012, Vitoria-Gasteiz, Álava +34 945184100 +34 945184126 www.smc.eu emcmarketing@smc.smces.es

Weight	2.270 Kg

Specifications are subject to change without prior notice and any obligation on the part of the manufacturer.

SMC CORPORATION Zuazobidea 14, 01012, Vitoria-Gasteiz, Álava +34 945184100 +34 945184126 www.smc.eu emcmarketing@smc.smces.es

Dimensions

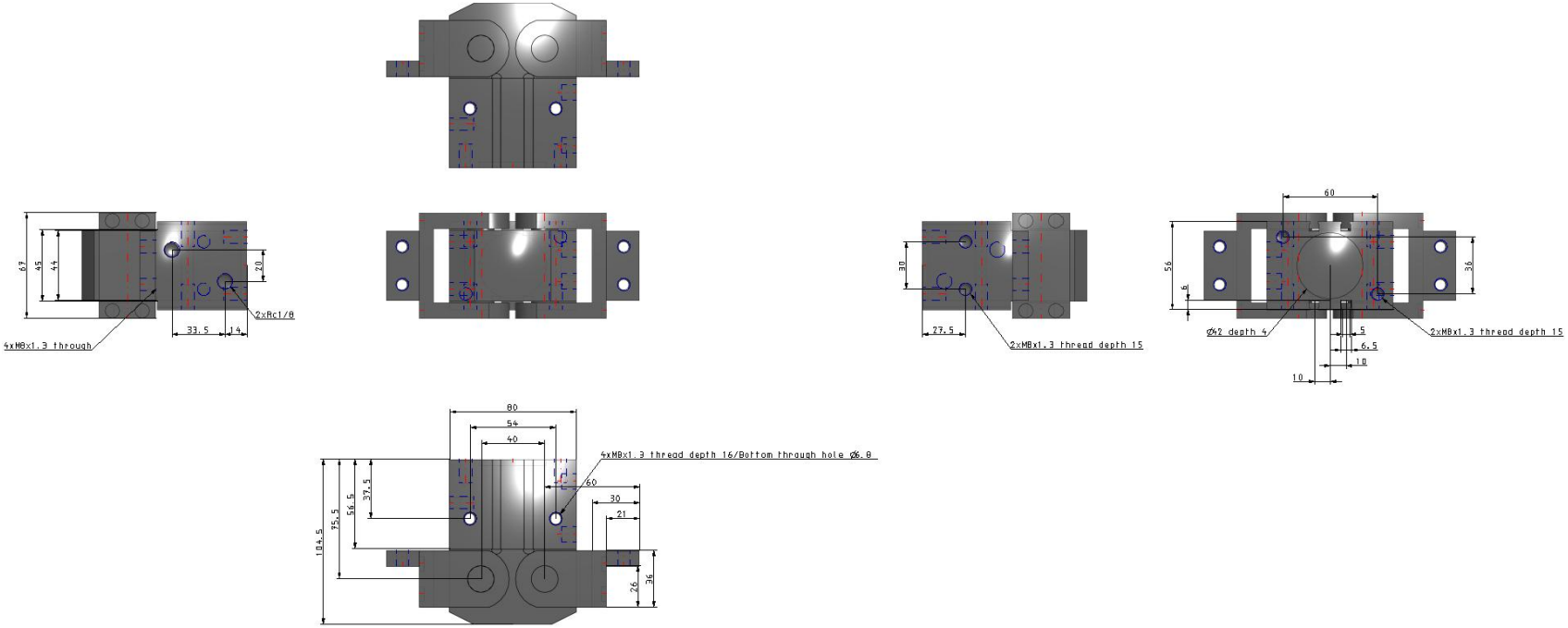

Specifications are subject to change without prior notice and any obligation on the part of the manufacturer.

SMC CORPORATION Zuazobidea 14, 01012, Vitoria-Gasteiz, Álava +34 945184100 +34 945184126 www.smc.eu emcmarketing@smc.smces.es

Constructions

Closed

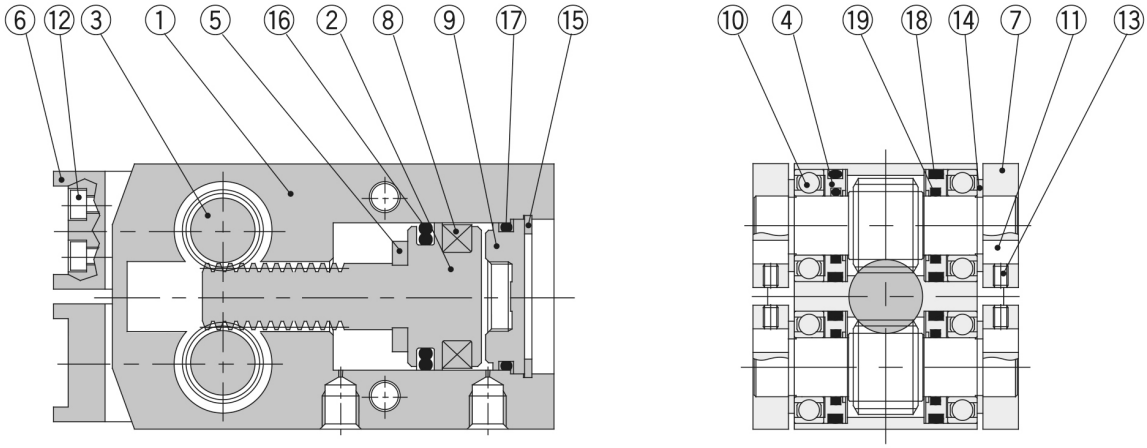

Open

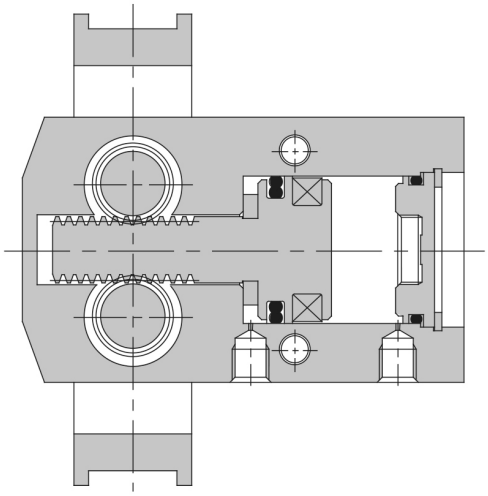

Component Parts

No.	Description	Material	Note
①	**Body**	Aluminum alloy	Hard anodized
②	**Piston**	Stainless steel	Nitriding
③	**Pinion gear**	Carbon steel	Heat treatment
④	**Seal cover**	Brass	
⑤	**Bumper**	Urethane rubber	
⑥	**Finger (A)**	Carbon steel	
⑦	**Finger (B)**	Carbon steel	
⑧	**Rubber magnet**	Synthetic rubber	

Component Parts

No.	Description	Material	Note
⑨	**Cap**	ø20, 25: Resin	
		ø32 to 50: Aluminum alloy	Hard anodized
⑩	**Ball bearing**	Carbon steel	Shield type
⑪	**Key**	Carbon steel	
⑫	**Hexagon socket head screw**	Carbon steel	
⑬	**Hexagon socket cap screw**	Carbon steel	
⑭	**C-shape snap ring**	Carbon steel	
⑮	**C-shape snap ring**	Carbon steel	

Specifications are subject to change without prior notice and any obligation on the part of the manufacturer.

SMC CORPORATION Zuazobidea 14, 01012, Vitoria-Gasteiz, Álava +34 945184100 +34 945184126 www.smc.eu emcmarketing@smc.smces.es

Additional information

Catalogue	MHW2-A_EU.pdf

Specifications are subject to change without prior notice and any obligation on the part of the manufacturer.

SMC CORPORATION Zuazobidea 14, 01012, Vitoria-Gasteiz, Álava +34 945184100 +34 945184126 www.smc.eu emcmarketing@smc.smces.es