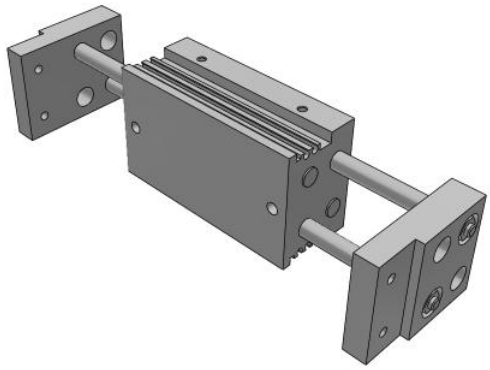

Improved Design - MHL2-Z
MHL2-20D1Z

Datasheet

General series information

- Maximum gripping force per finger 396 N at 0.5 MPa
- Double acting
- Repeatability: ±0.1 mm
- Max. operating frequency: 60 c.p.m.

Gripper, external grip, double-acting with permanent magnet on piston

Standard specifications

Bore Size	20 mm
Number	2 pcs. (Or None in Case of No Switch)
Opening/Closing Stroke	1 (Medium)
Lead Wire or Pre-wired Connector	0.5 m (Or None in the Case of No Switch)
Auto Switch	No Switch
Thread	M thread: Ø10 to Ø25, Rc: 32 to 40
Made to Order	None
Maximum operating pressure	0,6 MPa
Minimum operating pressure	0,1 MPa
F007-MIN_OP_PRESSURE	0,1 MPa
Maximum ambient temperature	60 ºC
Minimum ambient temperature	-10 ºC (No freezing)
Repeatability	+- 0,1 mm
Lubrication	Non-lube
Circulating fluid	Air
Effective holding force per finger (0.5 MPa)	74 N
Action	Double Acting
Weight	1.335 Kg

Specifications are subject to change without prior notice and any obligation on the part of the manufacturer.

SMC United Kingdom +34 945184126 sales@smc.uk

Dimensions

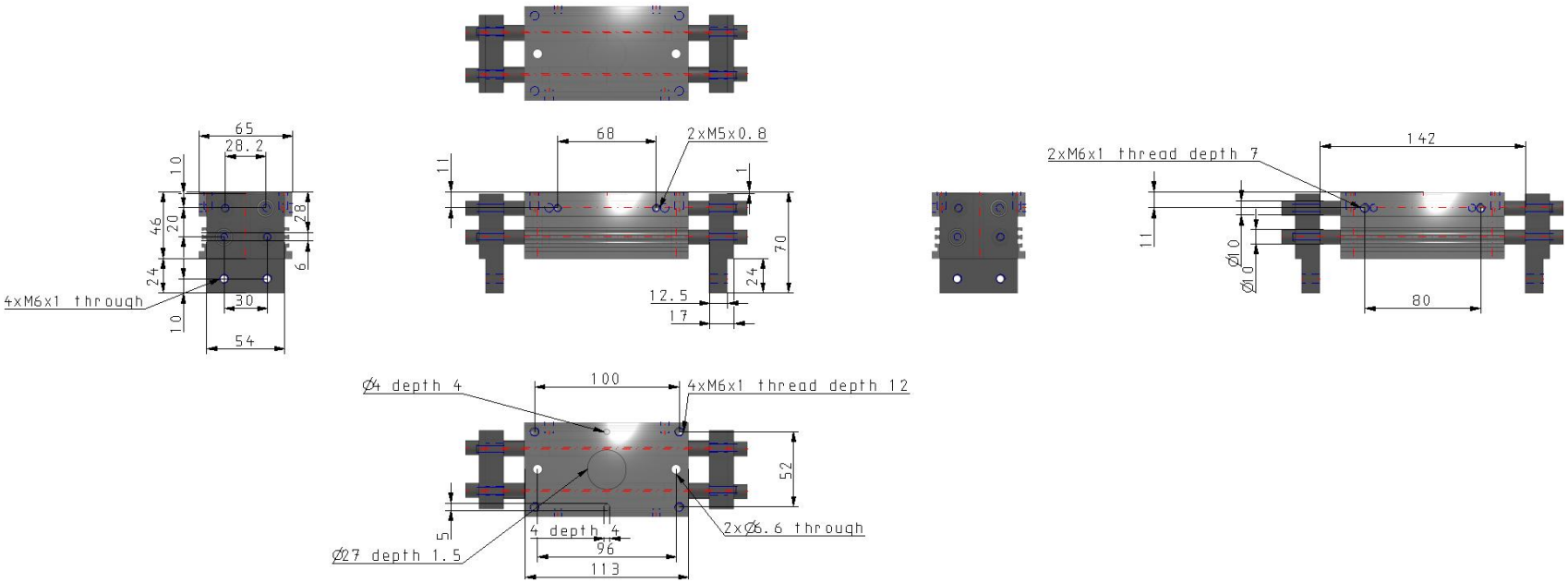

Specifications are subject to change without prior notice and any obligation on the part of the manufacturer.

SMC United Kingdom +34 945184126 sales@smc.uk

Constructions

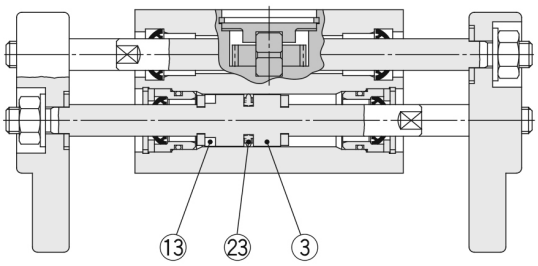

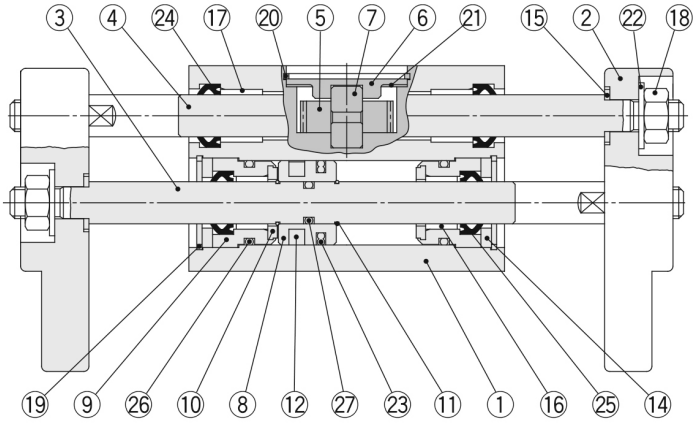

Component Parts

No.	Description	Material	Note
1	**Body**	Aluminium alloy	Hard anodised
2	**Finger**	Aluminium alloy	Hard anodised
3	**Piston rod**	Stainless steel	
4	**Rack**	Stainless steel	
5	**Pinion**	Carbon steel	
6	**Pinion cover**	Carbon steel	Electroless nickel plating
7	**Pinion axis**	Stainless steel	
8	**Piston**	Aluminium alloy	Hard anodised
9	**Rod cover**	Aluminium alloy	Trivalent chromated
10	**Bumper**	Urethane rubber	
11	**Clip**	Stainless steel spring wire	
12	**Rubber magnet**	Synthetic rubber	
13	**Magnet**	—	Nickel plating
14	**Rod seal cover B**	Cold rolled carbon steel sheet	Electroless nickel plating

No.	Description	Material	Note
15	**Washer**	Stainless steel	
16	**Bearing**	Oil containing polyacetal	
17	**Bearing**	Oil containing polyacetal	
18	**U-nut**	Carbon steel	Trivalent chromated
19	**Inverted internal retaining ring**	Carbon steel	Phosphate coating
20	**C type retaining ring**	Carbon steel	Phosphate coating
21	**Wave washer**	Steel for spring	Phosphate coating
22	**Conical spring washer**	Carbon steel	
23	**Piston seal**	NBR	
24	**Rod seal**	NBR	
25	**Rod seal**	NBR	
26	**Gasket**	NBR	
27	**Gasket**	NBR	

Specifications are subject to change without prior notice and any obligation on the part of the manufacturer.

SMC United Kingdom +34 945184126 sales@smc.uk

Additional information

Catalogue	MHL2-B_EU.pdf

Specifications are subject to change without prior notice and any obligation on the part of the manufacturer.

SMC United Kingdom +34 945184126 sales@smc.uk