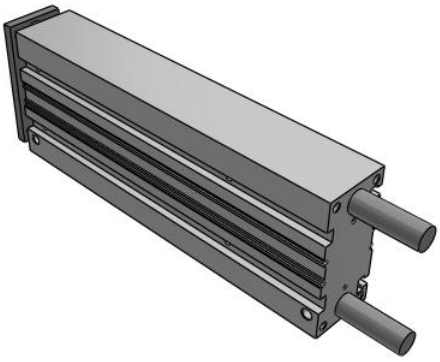

# MGP-Z (ø40 to ø100), Compact Guide Cylinder

## MGPM63TF-400Z

Datasheet

## General series information

- 3 types of bearing can be selected: slide bearing, ball bushing and high precision ball bushing.
- Compactness & Lightness
- Bore size: 40, 50, 63, 80, 100 (mm)
- Strokes from 10 to 400mm (depending upon bore size)
- 4 types of mounting are possible: top mounting, side mounting, bottom mounting and T-slot side mounting.
- Auto switches can be mounted on 2 surfaces.

*Double-acting, single-rod cylinder*

## Standard specifications

| | |
|---|---|
| Bearing Type | M (Slide Bearing) |
| Bore Size | Ø63 mm |
| Port Thread | TF [G] |
| Lube-retainer | Without Stable Lubrication Function |
| Stroke | 400 |
| Auto Switch | No Switch |
| Lead Wire Length | 0.5 m (Or None in the Case of No Switch) |
| Number of Auto Switches | 2 pcs. (Or None in the Case of No Switch) |
| Change of Guide Rod End Shape | None |
| Temperature Resistance | None |
| Low Speed | None |
| Stainless Steel | None |
| Fluororubber Seal | None |
| Grease for Food Processing Equipment | None |
| Pressure medium | Compressed air |
| Maximum temperature of pressure medium | 60 °C |
| Minimum temperature of pressure medium | -10 ºC (No freezing) |

*Specifications are subject to change without prior notice and any obligation on the part of the manufacturer.*



**SMC CORPORATION** Zuazobidea 14, 01012, Vitoria-Gasteiz, Álava +34 945184100 +34 945184126 www.smc.eu support.marketingeurope@smc.com

| | |
|---|---|
| Maximum operating pressure | 1.0 MPa |
| Minimum operating pressure | 0.1 MPa |
| Proof pressure | 1.5 MPa |
| Maximum ambient temperature | 60 ºC |
| Minimum ambient temperature | -10 ºC (No freezing) |
| Number of pneumatic connections | 4 pcs. |
| Pneumatic input connection | G 1/4 |
| Pneumatic exhaust connection | G 1/4 |
| Mode of operation of drive | Double acting |
| Theoretical cylinder force, advance stroke (at 0.5 MPa) | 1559 N |
| Theoretical cylinder force, return stroke (at 0.5 MPa) | 1431 N |
| Maximum piston speed | 500 mm/s |
| Type of cushioning | Rubber bumper on both ends |
| Non-rotating accuracy of plate | ± 0.04 º |
| Weight | 14.100 Kg |

Specifications are subject to change without prior notice and any obligation on the part of the manufacturer.



SMC CORPORATION Zuazobidea 14, 01012, Vitoria-Gasteiz, Álava +34 945184100 +34 945184126 www.smc.eu support.marketingeurope@smc.com

# Dimensions

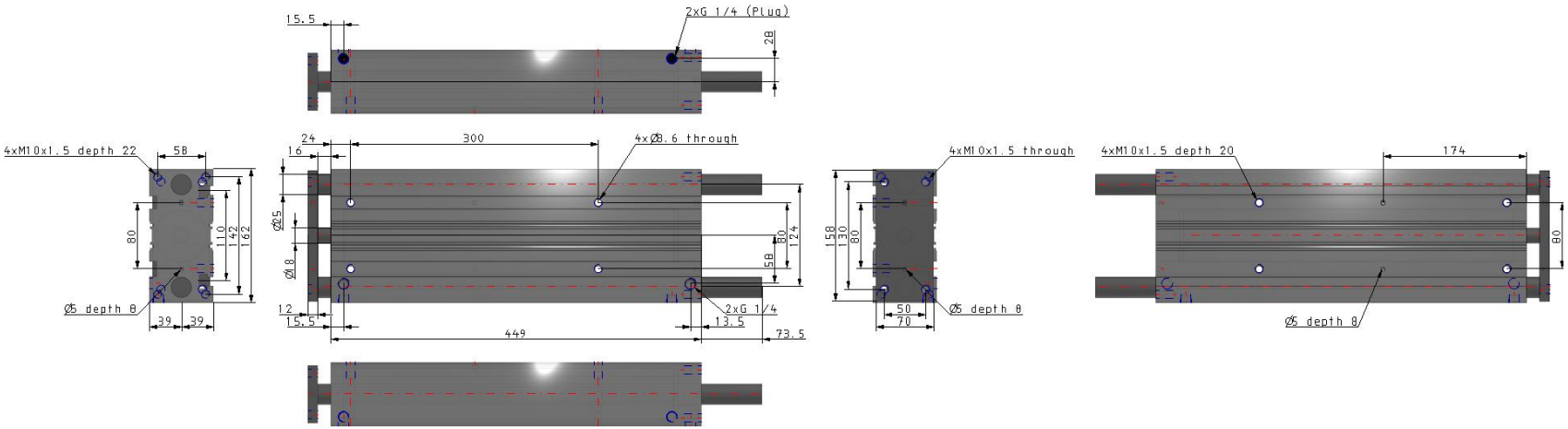


Specifications are subject to change without prior notice and any obligation on the part of the manufacturer.



**SMC CORPORATION** Zuazobidea 14, 01012, Vitoria-Gasteiz, Álava +34 945184100 +34 945184126 www.smc.eu support.marketingeurope@smc.com

# Constructions

## MGPM12 to 25

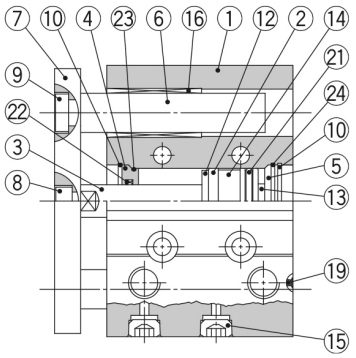


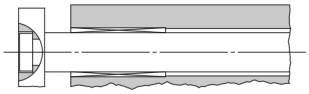

Ø 12 to Ø 25 50 stroke or less

Ø 12 to Ø 25 Over 50 stroke

## MGPM32 to 100

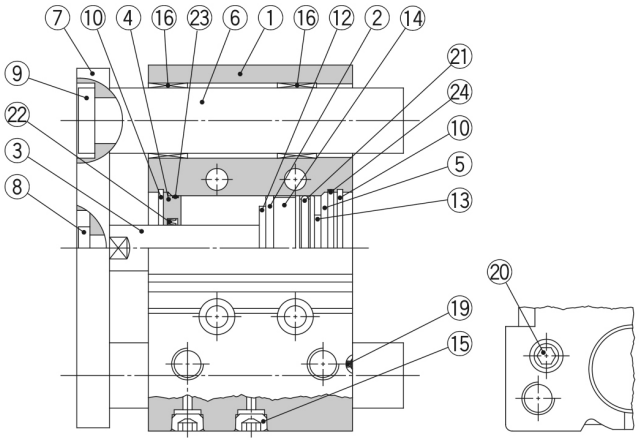


Ø 63 or more

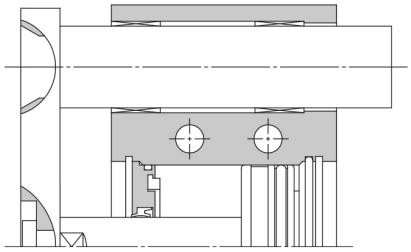

Ø 50 or more

### Component Parts

| No. | Description | Material | Note | |
|---|---|---|---|---|
| 1 | **Body** | Aluminium alloy | Hard anodised | |
| 2 | **Piston** | Aluminium alloy | | |
| 3 | **Piston rod** | Stainless steel | Ø 12 to Ø 25 | |
| | | Carbon steel | Ø 32 to Ø 100 | Hard chrome plating |
| 4 | **Collar** | Aluminium alloy | Chromated | |
| 5 | **Head cover** | Aluminium alloy | Ø 12 to Ø 63 | Chromated |
| | | | Ø 80, Ø 100 | Painted |
| 6 | **Guide rod** | Carbon steel | Hard chrome plating | |
| 7 | **Plate** | Carbon steel | Nickel plating | |
| 8 | **Plate mounting bolt** | Carbon steel | Nickel plating | |
| 9 | **Guide bolt** | Carbon steel | Nickel plating | |
| 10 | **Retaining ring** | Carbon tool steel | Phosphate coated | |
| 11 | **Retaining ring** | Carbon tool steel | Phosphate coated | |
| 12 | **Bumper A** | Urethane | | |
| 13 | **Bumper B** | Urethane | | |
| 14 | **Magnet** | — | | |
| 15 | **Plug** | Carbon steel | Ø 12, Ø 16 | Nickel plating |
| | **Hexagon socket head plug** | | Ø 20 to Ø 100 | |
| 16 | **Slide bearing** | Bearing alloy | | |

*: A felt is not installed on the slide bearing.

### Component Parts

| No. | Description | Material | Note | |
|---|---|---|---|---|
| 17 | **Ball bushing** | | | |
| 18 | **Spacer** | Aluminium alloy | | |
| 19 | **Steel ball** | Carbon steel | Ø 12 to Ø 50 | |
| 20 | **Plug** | Carbon steel | Ø 63 to Ø 100 | Nickel plating |
| 21* | **Piston seal** | NBR | | |
| 22* | **Rod seal** | NBR | | |
| 23* | **Gasket A** | NBR | | |
| 24* | **Gasket B** | NBR | | |

### Replacement Parts/Seal Kit

| Bore size [mm] | Kit no. | Contents | Bore size [mm] | Kit no. | Contents |
|---|---|---|---|---|---|
| **12** | MGP12-Z-PS | Set of nos. above ㉑, ㉒, ㉓, ㉔ | **40** | MGP40-Z-PS | Set of nos. above ㉑, ㉒, ㉓, ㉔ |
| **16** | MGP16-Z-PS | | **50** | MGP50-Z-PS | |
| **20** | MGP20-Z-PS | | **63** | MGP63-Z-PS | |
| **25** | MGP25-Z-PS | | **80** | MGP80-Z-PS | |
| **32** | MGP32-Z-PS | | **100** | MGP100-Z-PS | |

*: Seal kit includes ㉑ to ㉔. Order the seal kit, based on each bore size.
*: Since the seal kit does not include a grease pack, order it separately.
**Grease pack part number: GR-S-010** (10 g)

*Specifications are subject to change without prior notice and any obligation on the part of the manufacturer.*



**SMC CORPORATION** Zuazobidea 14, 01012, Vitoria-Gasteiz, Álava +34 945184100 +34 945184126 www.smc.eu support.marketingeurope@smc.com

## Additional information

| | |
|---|---|
| Catalogue | MGP-Z-Dd_EU.pdf |
| Operation manuals | OM_MGP-Z_MGPx-OM0047PEN-B.pdf |

Specifications are subject to change without prior notice and any obligation on the part of the manufacturer.



SMC CORPORATION Zuazobidea 14, 01012, Vitoria-Gasteiz, Álava +34 945184100 +34 945184126 www.smc.eu support.marketingeurope@smc.com