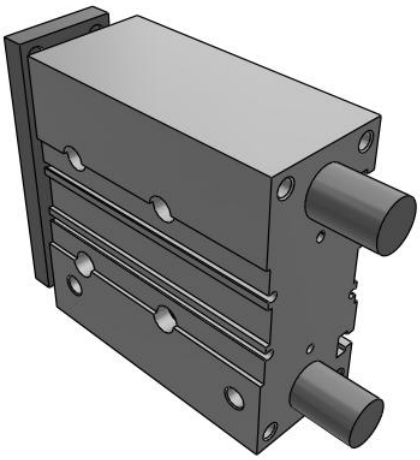

MGP-Z (ø40 to ø100), Compact Guide Cylinder

MGPM40TF-75Z

Datasheet

General series information

- 3 types of bearing can be selected: slide bearing, ball bushing and high precision ball bushing.
- Compactness & Lightness
- Bore size: 40, 50, 63, 80, 100 (mm)
- Strokes from 10 to 400mm (depending upon bore size)
- 4 types of mounting are possible: top mounting, side mounting, bottom mounting and T-slot side mounting.
- Auto switches can be mounted on 2 surfaces.

Double-acting, single-rod cylinder

Standard specifications

Number of Auto Switches	2 pcs. [Or None in the Case of No Switch]
Low Speed	None
Stroke	75
Bearing Type	M (Slide Bearing)
Lube-retainer	Without Stable Lubrication Function
Auto Switch	No Switch
Grease for Food Processing Equipment	None
Bore Size	Ø40 mm
Lead Wire Length	0.5m [Or None in the Case of No Switch]
Change of Guide Rod End Shape	None
Fluororubber Seal	None
Stainless Steel	None
Temperature Resistance	None
Port Thread Type	TF [G]
Pressure medium	Compressed air
Maximum temperature of pressure medium	60 °C
Minimum temperature of pressure medium	-10 ºC (No freezing)

Specifications are subject to change without prior notice and any obligation on the part of the manufacturer.

SMC United Kingdom +34 945184126 sales@smc.uk

Maximum operating pressure	1.0 MPa
Minimum operating pressure	0.1 MPa
Proof pressure	1.5 MPa
Maximum ambient temperature	60 ºC
Minimum ambient temperature	-10 ºC (No freezing)
Number of pneumatic connections	4 pcs.
Pneumatic input connection	G 1/8
Pneumatic exhaust connection	G 1/8
Mode of operation of drive	Double acting
Theoretical cylinder force, advance stroke (at 0.5 MPa)	628 N
Theoretical cylinder force, return stroke (at 0.5 MPa)	551 N
Maximum piston speed	500 mm/s
Type of cushioning	Rubber bumper on both ends
Non-rotating accuracy of plate	± 0.05 º
Weight	2.520 Kg

Specifications are subject to change without prior notice and any obligation on the part of the manufacturer.

SMC United Kingdom +34 945184126 sales@smc.uk

Dimensions

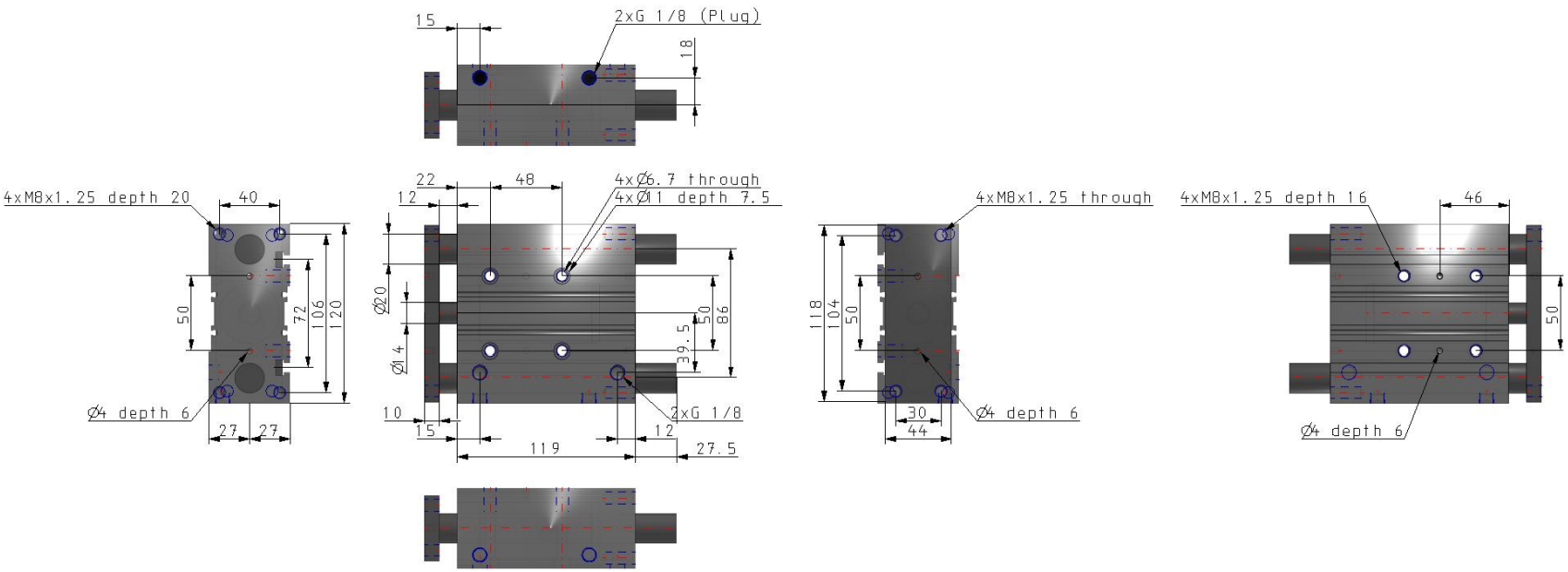

Specifications are subject to change without prior notice and any obligation on the part of the manufacturer.

Constructions

MGPM12 to 25

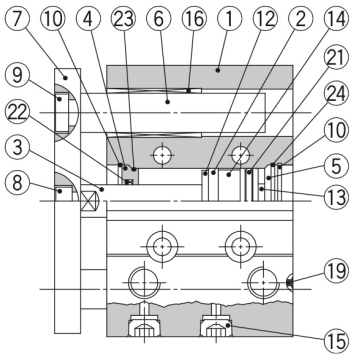

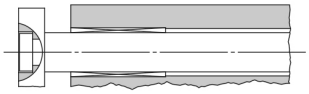

Ø 12 to Ø 25 50 stroke or less

Ø 12 to Ø 25 Over 50 stroke

MGPM32 to 100

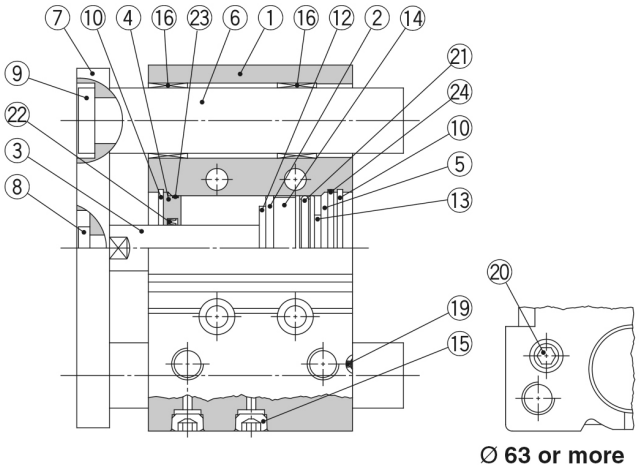

Ø 63 or more

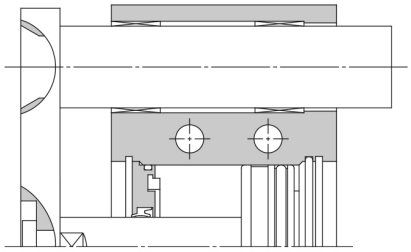

Ø 50 or more

Component Parts

No.	Description	Material	Note	
1	**Body**	Aluminium alloy	Hard anodised	
2	**Piston**	Aluminium alloy		
3	**Piston rod**	Stainless steel	Ø 12 to Ø 25	
		Carbon steel	Ø 32 to Ø 100	Hard chrome plating
4	**Collar**	Aluminium alloy	Chromated	
5	**Head cover**	Aluminium alloy	Ø 12 to Ø 63	Chromated
			Ø 80, Ø 100	Painted
6	**Guide rod**	Carbon steel	Hard chrome plating	
7	**Plate**	Carbon steel	Nickel plating	
8	**Plate mounting bolt**	Carbon steel	Nickel plating	
9	**Guide bolt**	Carbon steel	Nickel plating	
10	**Retaining ring**	Carbon tool steel	Phosphate coated	
11	**Retaining ring**	Carbon tool steel	Phosphate coated	
12	**Bumper A**	Urethane		
13	**Bumper B**	Urethane		
14	**Magnet**	—		
15	**Plug**	Carbon steel	Ø 12, Ø 16	Nickel plating
	Hexagon socket head plug		Ø 20 to Ø 100	
16	**Slide bearing**	Bearing alloy		

*: A felt is not installed on the slide bearing.

Component Parts

No.	Description	Material	Note	
17	**Ball bushing**			
18	**Spacer**	Aluminium alloy		
19	**Steel ball**	Carbon steel	Ø 12 to Ø 50	
20	**Plug**	Carbon steel	Ø 63 to Ø 100	Nickel plating
21*	**Piston seal**	NBR		
22*	**Rod seal**	NBR		
23*	**Gasket A**	NBR		
24*	**Gasket B**	NBR		

Replacement Parts/Seal Kit

Bore size [mm]	Kit no.	Contents	Bore size [mm]	Kit no.	Contents
12	MGP12-Z-PS	Set of nos. above ㉑, ㉒, ㉓, ㉔	**40**	MGP40-Z-PS	Set of nos. above ㉑, ㉒, ㉓, ㉔
16	MGP16-Z-PS		**50**	MGP50-Z-PS	
20	MGP20-Z-PS		**63**	MGP63-Z-PS	
25	MGP25-Z-PS		**80**	MGP80-Z-PS	
32	MGP32-Z-PS		**100**	MGP100-Z-PS	

*: Seal kit includes ㉑ to ㉔. Order the seal kit, based on each bore size.
*: Since the seal kit does not include a grease pack, order it separately.
Grease pack part number: GR-S-010 (10 g)

Specifications are subject to change without prior notice and any obligation on the part of the manufacturer.

SMC United Kingdom +34 945184126 sales@smc.uk

Additional information

Catalogue	MGP-Z-Dd_EU.pdf
Operation manuals	OM_MGP-Z_MGPx-OM0047PEN-B.pdf

Specifications are subject to change without prior notice and any obligation on the part of the manufacturer.

SMC United Kingdom +34 945184126 sales@smc.uk