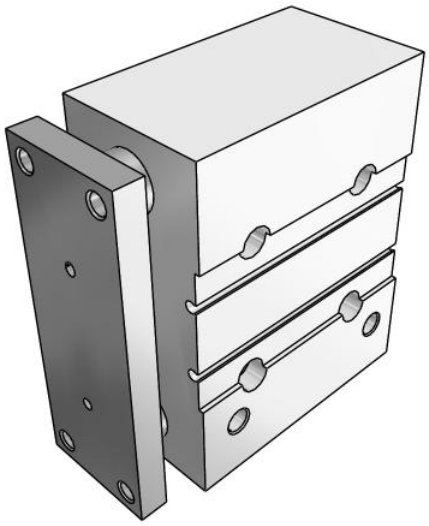

MGP-Z (ø12 to ø32), Compact Guide Cylinder

MGPM40TF-50Z

Datasheet

General series information

- 3 types of bearing can be selected: slide bearing, ball bushing and high precision ball bushing.
- Compactness & Lightness
- Bore size: 12, 16, 20, 25, 32 (mm)
- Strokes from 1 to 400mm (depending upon bore size)
- 4 types of mounting are possible: top mounting, side mounting, bottom mounting and T-slot side mounting.
- Auto switches can be mounted on 2 surfaces.

Standard specifications

Low Speed	None
Stroke	50
Number of auto switches	2 pcs. [Or None in the Case of No Switch]
Lube-retainer	Without Stable Lubrication Function
Auto Switch	No Switch
Grease for Food Processing Equipment	None
Bore Size	Ø40 mm
Port thread Type	TF [G]
Change of Guide Rod End Shape	None
Fluororubber Seal	None
Lead Wire length	0.5m [Or None in the Case of No Switch]
Bearing type	M (Slide bearing)
Stainless Steel	None
Temperature Resistance	None
Pressure medium	Compressed air;Compressed air
Maximum temperature of pressure medium	60 °C;60 °C
Minimum temperature of pressure medium	-10 ºC (No freezing);-10 ºC (No freezing)

Specifications are subject to change without prior notice and any obligation on the part of the manufacturer.

SMC United Kingdom +34 945184126 sales@smc.uk

Maximum ambient temperature	60 ºC;60 ºC
Minimum ambient temperature	-10 ºC (No freezing);-10 ºC (No freezing)
Number of pneumatic connections	4 pcs.
Mode of operation of drive	Double acting
Weight	2.040 Kg

Specifications are subject to change without prior notice and any obligation on the part of the manufacturer.

SMC United Kingdom +34 945184126 sales@smc.uk

Dimensions

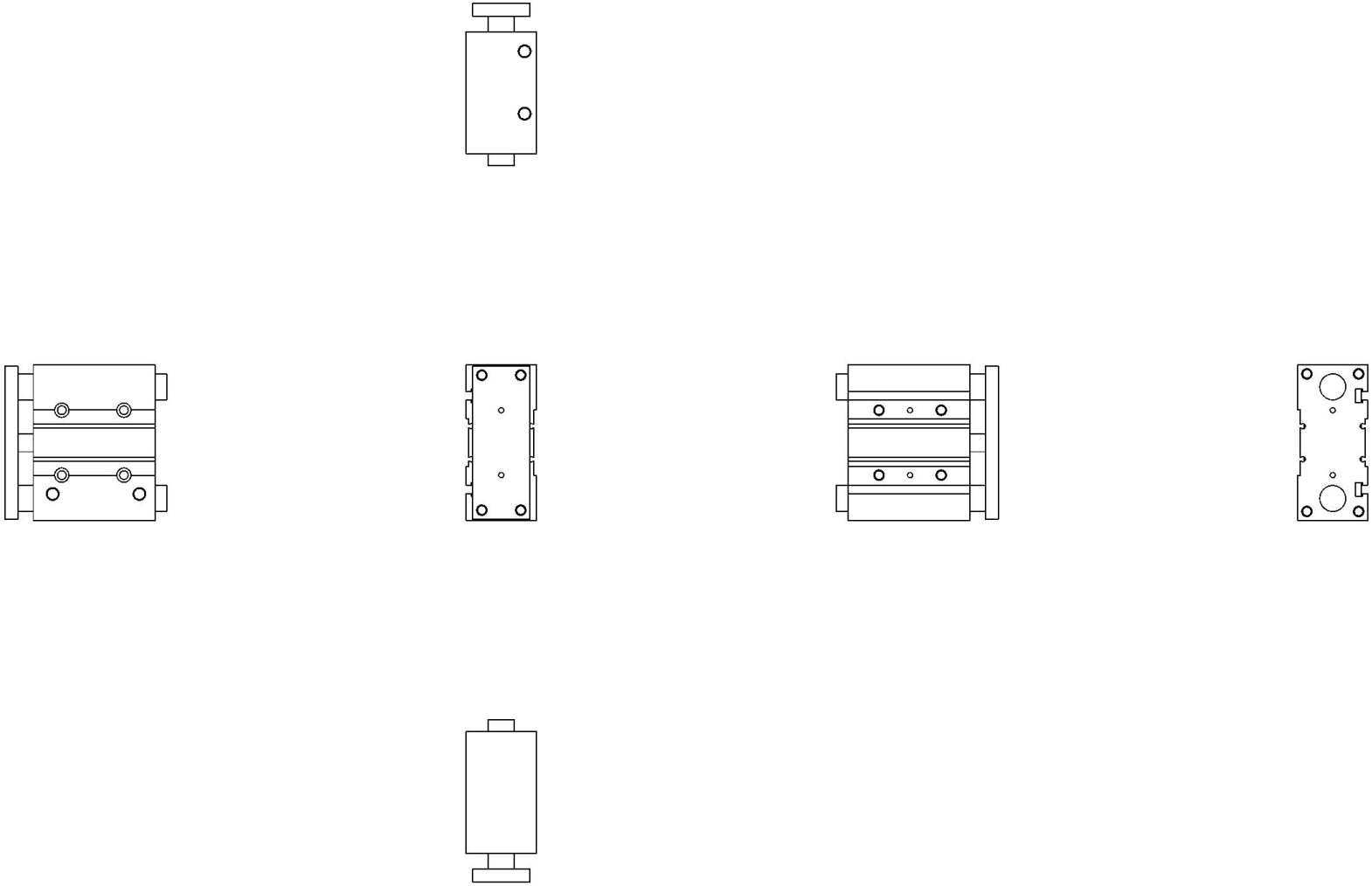

Specifications are subject to change without prior notice and any obligation on the part of the manufacturer.

Additional information

Catalogue	MGP-Z-Dd_EU.pdf
Operation manuals	OM_MGP-Z_MGPx-OM0047PEN-B.pdf

Specifications are subject to change without prior notice and any obligation on the part of the manufacturer.

SMC United Kingdom +34 945184126 sales@smc.uk