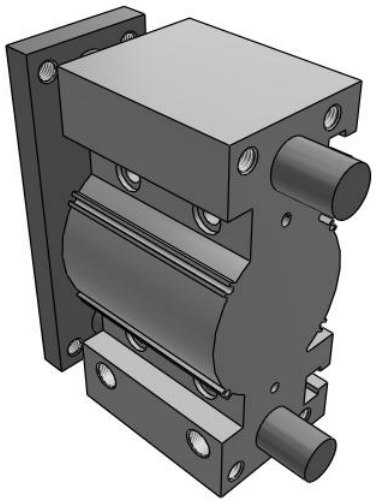

MGP-Z (ø40 to ø100), Compact Guide Cylinder

MGPL80TF-50Z

Datasheet

General series information

- 3 types of bearing can be selected: slide bearing, ball bushing and high precision ball bushing.
- Compactness & Lightness
- Bore size: 40, 50, 63, 80, 100 (mm)
- Strokes from 10 to 400mm (depending upon bore size)
- 4 types of mounting are possible: top mounting, side mounting, bottom mounting and T-slot side mounting.
- Auto switches can be mounted on 2 surfaces.

Double-acting, single-rod cylinder

Standard specifications

Bearing Type	L (Ball Bushing Bearing)
Bore Size	Ø80 mm
Port Thread	TF [G]
Lube-retainer	Without Stable Lubrication Function
Stroke	50
Auto Switch	No Switch
Lead Wire Length	0.5 m (Or None in the Case of No Switch)
Number of Auto Switches	2 pcs. (Or None in the Case of No Switch)
Change of Guide Rod End Shape	None
Temperature Resistance	None
Low Speed	None
Stainless Steel	None
Fluororubber Seal	None
Grease for Food Processing Equipment	None
Pressure medium	Compressed air
Maximum temperature of pressure medium	60 °C
Minimum temperature of pressure medium	-10 ºC (No freezing)

Specifications are subject to change without prior notice and any obligation on the part of the manufacturer.

SMC CORPORATION Zuazobidea 14, 01012, Vitoria-Gasteiz, Álava +34 945184100 +34 945184126 www.smc.eu support.marketingeurope@smc.com

Maximum operating pressure	1.0 MPa
Minimum operating pressure	0.1 MPa
Proof pressure	1.5 MPa
Maximum ambient temperature	60 ºC
Minimum ambient temperature	-10 ºC (No freezing)
Number of pneumatic connections	4 pcs.
Pneumatic input connection	G 3/8
Pneumatic exhaust connection	G 3/8
Mode of operation of drive	Double acting
Theoretical cylinder force, advance stroke (at 0.5 MPa)	2513 N
Theoretical cylinder force, return stroke (at 0.5 MPa)	2323 N
Maximum piston speed	400 mm/s
Type of cushioning	Rubber bumper on both ends
Non-rotating accuracy of plate	± 0.03 º
Weight	6.290 Kg

Specifications are subject to change without prior notice and any obligation on the part of the manufacturer.

SMC CORPORATION Zuazobidea 14, 01012, Vitoria-Gasteiz, Álava +34 945184100 +34 945184126 www.smc.eu support.marketingeurope@smc.com

Dimensions

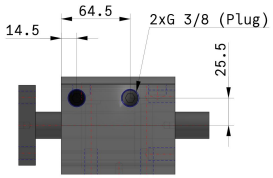

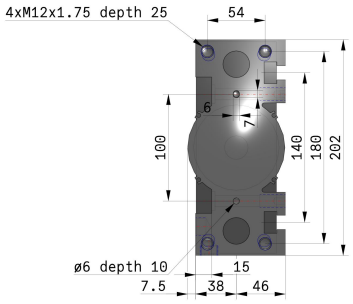

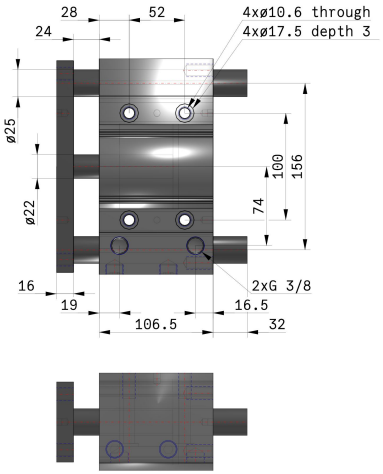

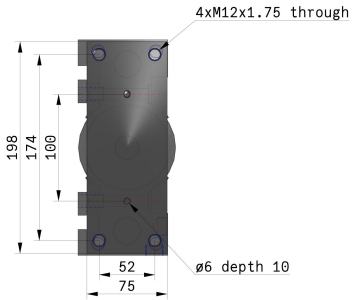

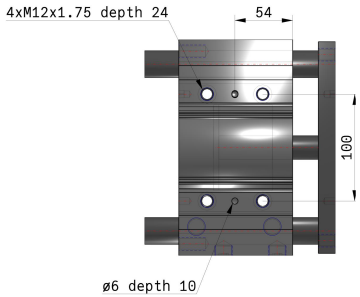

Specifications are subject to change without prior notice and any obligation on the part of the manufacturer.

SMC CORPORATION Zuazobidea 14, 01012, Vitoria-Gasteiz, Álava +34 945184100 +34 945184126 www.smc.eu support.marketingeurope@smc.com

Constructions

MGPM12 to 25

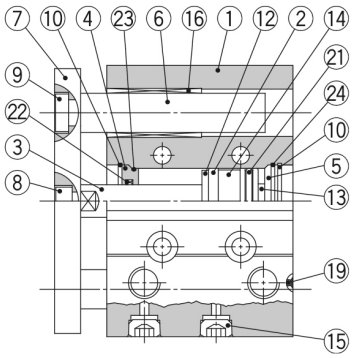

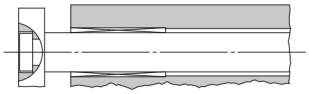

Ø 12 to Ø 25 50 stroke or less

Ø 12 to Ø 25 Over 50 stroke

MGPM32 to 100

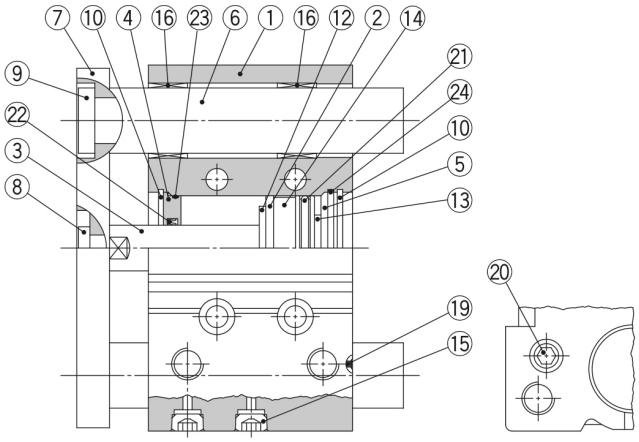

Ø 63 or more

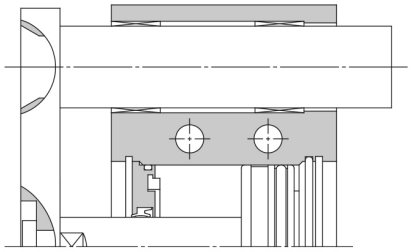

Ø 50 or more

Component Parts

No.	Description	Material	Note	
1	**Body**	Aluminium alloy	Hard anodised	
2	**Piston**	Aluminium alloy		
3	**Piston rod**	Stainless steel	Ø 12 to Ø 25	
		Carbon steel	Ø 32 to Ø 100	Hard chrome plating
4	**Collar**	Aluminium alloy	Chromated	
5	**Head cover**	Aluminium alloy	Ø 12 to Ø 63	Chromated
			Ø 80, Ø 100	Painted
6	**Guide rod**	Carbon steel	Hard chrome plating	
7	**Plate**	Carbon steel	Nickel plating	
8	**Plate mounting bolt**	Carbon steel	Nickel plating	
9	**Guide bolt**	Carbon steel	Nickel plating	
10	**Retaining ring**	Carbon tool steel	Phosphate coated	
11	**Retaining ring**	Carbon tool steel	Phosphate coated	
12	**Bumper A**	Urethane		
13	**Bumper B**	Urethane		
14	**Magnet**	—		
15	**Plug**	Carbon steel	Ø 12, Ø 16	Nickel plating
	Hexagon socket head plug		Ø 20 to Ø 100	
16	**Slide bearing**	Bearing alloy		

*: A felt is not installed on the slide bearing.

Component Parts

No.	Description	Material	Note	
17	**Ball bushing**			
18	**Spacer**	Aluminium alloy		
19	**Steel ball**	Carbon steel	Ø 12 to Ø 50	
20	**Plug**	Carbon steel	Ø 63 to Ø 100	Nickel plating
21*	**Piston seal**	NBR		
22*	**Rod seal**	NBR		
23*	**Gasket A**	NBR		
24*	**Gasket B**	NBR		

Replacement Parts/Seal Kit

Bore size [mm]	Kit no.	Contents	Bore size [mm]	Kit no.	Contents
12	MGP12-Z-PS	Set of nos. above ㉑, ㉒, ㉓, ㉔	**40**	MGP40-Z-PS	Set of nos. above ㉑, ㉒, ㉓, ㉔
16	MGP16-Z-PS		**50**	MGP50-Z-PS	
20	MGP20-Z-PS		**63**	MGP63-Z-PS	
25	MGP25-Z-PS		**80**	MGP80-Z-PS	
32	MGP32-Z-PS		**100**	MGP100-Z-PS	

*: Seal kit includes ㉑ to ㉔. Order the seal kit, based on each bore size.
*: Since the seal kit does not include a grease pack, order it separately.
Grease pack part number: GR-S-010 (10 g)

Specifications are subject to change without prior notice and any obligation on the part of the manufacturer.

SMC CORPORATION Zuazobidea 14, 01012, Vitoria-Gasteiz, Álava +34 945184100 +34 945184126 www.smc.eu support.marketingeurope@smc.com

Additional information

Catalogue	MGP-Z-Dd_EU.pdf
Operation manuals	OM_MGP-Z_MGPx-OM0047PEN-B.pdf

Specifications are subject to change without prior notice and any obligation on the part of the manufacturer.

SMC CORPORATION Zuazobidea 14, 01012, Vitoria-Gasteiz, Álava +34 945184100 +34 945184126 www.smc.eu support.marketingeurope@smc.com