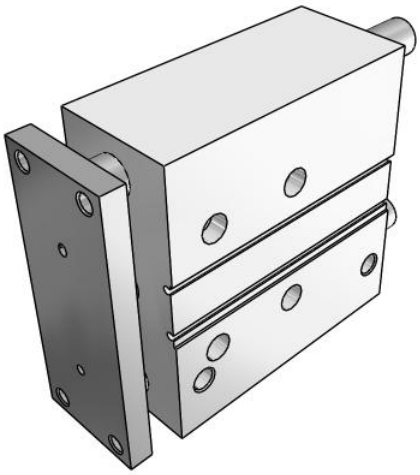

# MGP-Z (ø12 to ø32), Compact Guide Cylinder

## MGPL50TF-100Z

Datasheet

## General series information

- 3 types of bearing can be selected: slide bearing, ball bushing and high precision ball bushing.
- Compactness & Lightness
- Bore size: 12, 16, 20, 25, 32 (mm)
- Strokes from 1 to 400mm (depending upon bore size)
- 4 types of mounting are possible: top mounting, side mounting, bottom mounting and T-slot side mounting.
- Auto switches can be mounted on 2 surfaces.

## Standard specifications

| | |
|---|---|
| Low Speed | None |
| Stroke | 100 |
| Number of auto switches | 2 pcs. [Or None in the Case of No Switch] |
| Lube-retainer | Without Stable Lubrication Function |
| Auto Switch | No Switch |
| Grease for Food Processing Equipment | None |
| Bore Size | Ø50 mm |
| Port thread Type | TF [G] |
| Change of Guide Rod End Shape | None |
| Fluororubber Seal | None |
| Lead Wire length | 0.5m [Or None in the Case of No Switch] |
| Bearing type | L (Ball bushing bearing) |
| Stainless Steel | None |
| Temperature Resistance | None |
| Pressure medium | Compressed air;Compressed air |
| Maximum temperature of pressure medium | 60 °C;60 °C |
| Minimum temperature of pressure medium | -10 ºC (No freezing);-10 ºC (No freezing) |

Specifications are subject to change without prior notice and any obligation on the part of the manufacturer.



SMC United Kingdom +34 945184126 sales@smc.uk

| | |
|---|---|
| Maximum ambient temperature | 60 ºC;60 ºC |
| Minimum ambient temperature | -10 ºC (No freezing);-10 ºC (No freezing) |
| Number of pneumatic connections | 4 pcs. |
| Mode of operation of drive | Double acting |
| Weight | 4.340 Kg |

Specifications are subject to change without prior notice and any obligation on the part of the manufacturer.



SMC United Kingdom +34 945184126 sales@smc.uk

# Dimensions

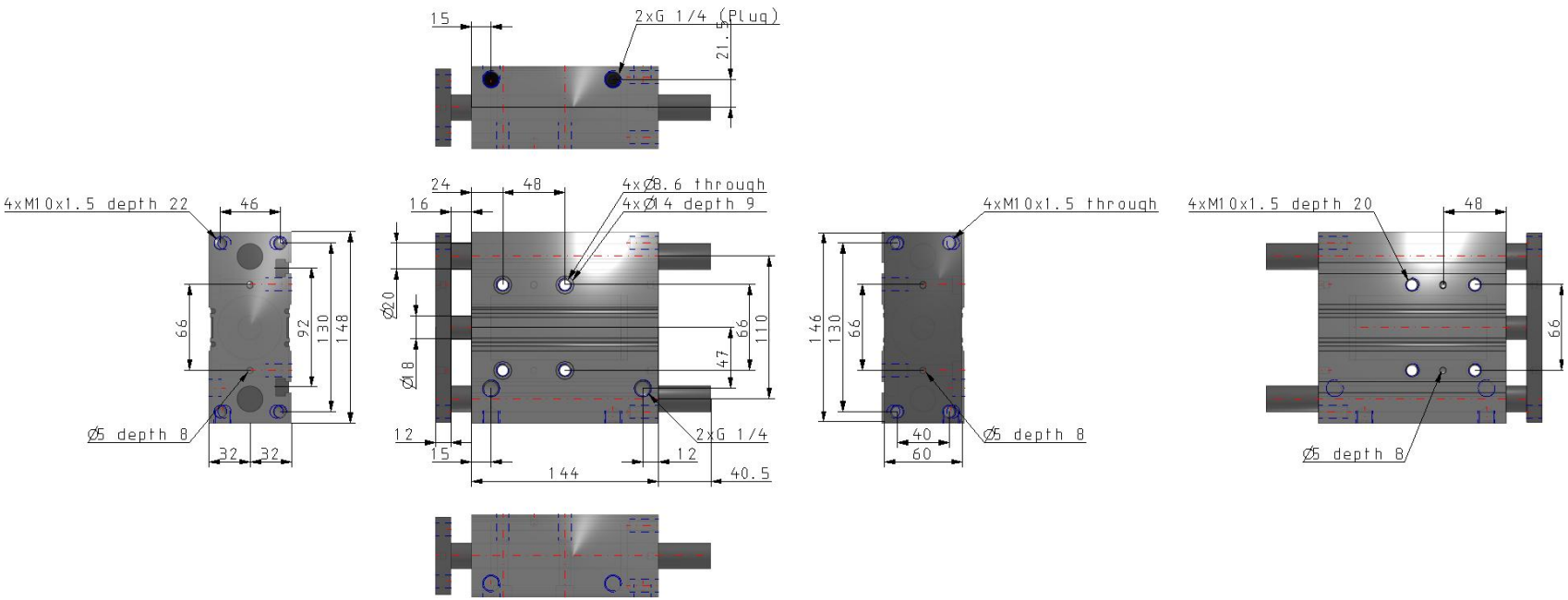


Specifications are subject to change without prior notice and any obligation on the part of the manufacturer.

## Additional information

| | |
|---|---|
| Catalogue | MGP-Z-Dd_EU.pdf |
| Operation manuals | OM_MGP-Z_MGPx-OM0047PEN-B.pdf |

Specifications are subject to change without prior notice and any obligation on the part of the manufacturer.



SMC United Kingdom +34 945184126 sales@smc.uk