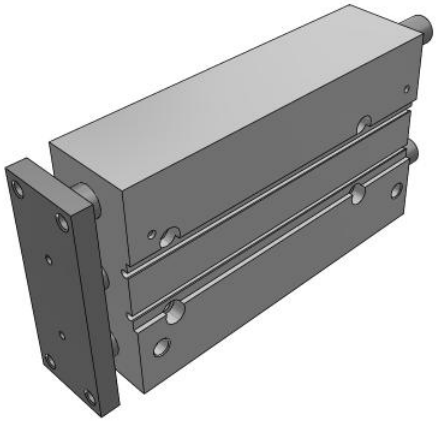

MGP-AZ, Compact Guide Cylinder, Air Cushion

MGPL32TF-125AZ

Datasheet

General series information

- With Air Cushion.
- 3 types of bearing can be selected: slide bearing, ball bushing and high precision ball bushing.
- Compactness & Lightness
- Bore size: 16, 20, 25, 32, 40, 50, 63, 80, 100 (mm)
- Strokes from 10 to 400mm (depending upon bore size)
- Auto switches can be mounted on 2 surfaces.

Double-acting, single-rod cylinder

Standard specifications

Bearing Type	L (Ball Bushing)
Bore Size	Ø32 mm
Port Thread Type	TF [G]
Stroke	125 mm
Auto Switch	No Switch
Lead Wire or Prewired Connector	0.5m [Or None in the Case of No Switch]
Number	2 pcs. [Or None in the Case of No Switch]
Made to Order	None
Pressure medium	Air
Maximum temperature of pressure medium	60 ºC
Minimum temperature of pressure medium	-10 ºC (No freezing)
Maximum operating pressure	1.0 MPa
Minimum operating pressure	0.12 MPa
Proof pressure	1.5 MPa
Maximum ambient temperature	60 ºC
Maximum ambient temperature with magnet	-10 ºC (No freezing)
Number of pneumatic connections	4 pcs.

Specifications are subject to change without prior notice and any obligation on the part of the manufacturer.

SMC CORPORATION Zuazobidea 14, 01012, Vitoria-Gasteiz, Álava +34 945184100 +34 945184126 www.smc.eu support.marketingeurope@smc.com

Pneumatic input connection	G 1/8
Pneumatic output connection	G 1/8
Mode of operation of drive	Double acting
Theoretical cylinder force, advance stroke (at 0.5 MPa)	402 N
Theoretical cylinder force, return stroke (at 0.5 MPa)	325 N
Maximum piston speed	500 mm/s
Type of cushioning	Air cushion on both ends (Without bumper)
Non-rotating accuracy of plate	± 0.03 º

Specifications are subject to change without prior notice and any obligation on the part of the manufacturer.

SMC CORPORATION Zuazobidea 14, 01012, Vitoria-Gasteiz, Álava +34 945184100 +34 945184126 www.smc.eu support.marketingeurope@smc.com

Dimensions

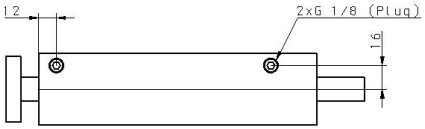

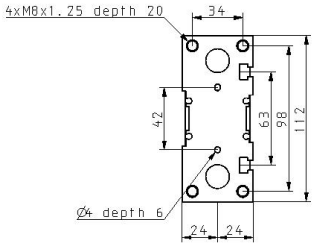

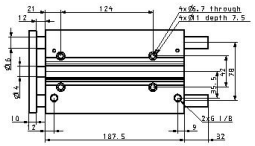

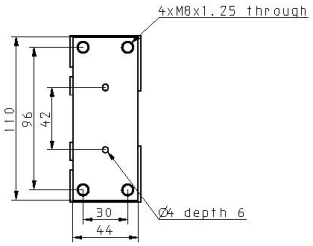

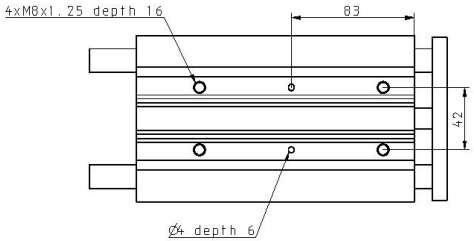

Specifications are subject to change without prior notice and any obligation on the part of the manufacturer.

SMC CORPORATION Zuazobidea 14, 01012, Vitoria-Gasteiz, Álava +34 945184100 +34 945184126 www.smc.eu support.marketingeurope@smc.com

Constructions

MGPM

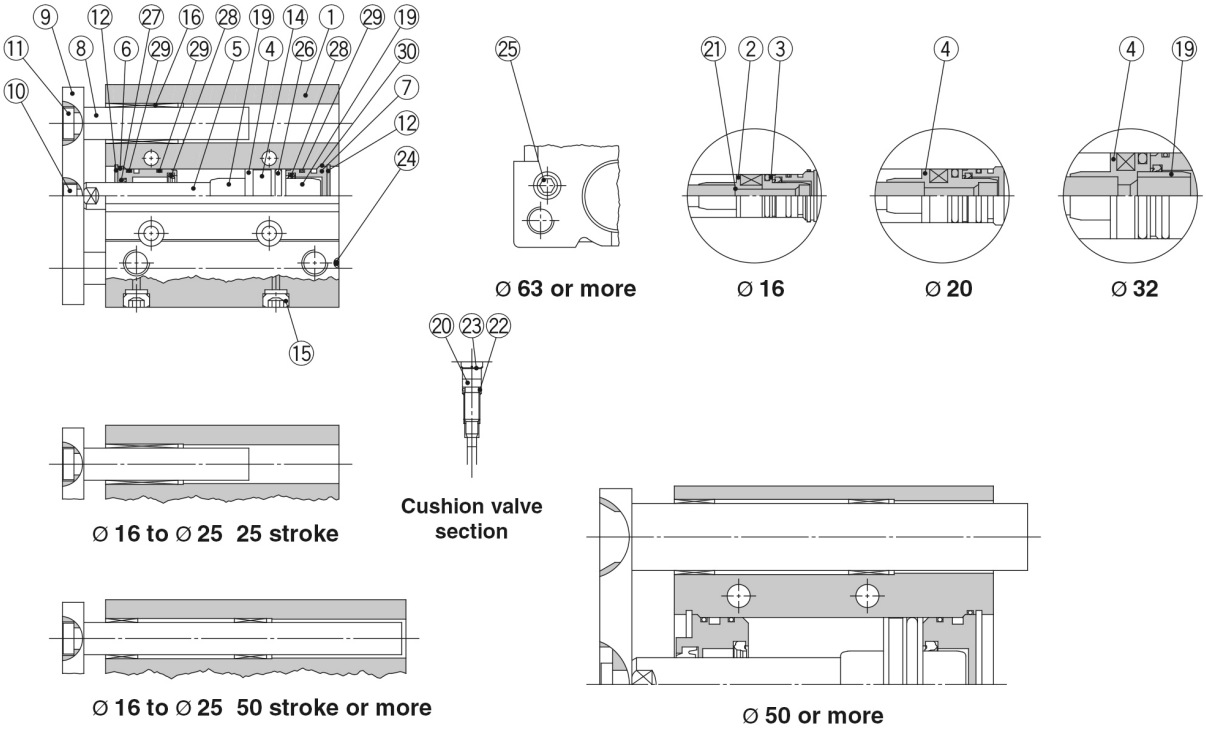

Component Parts

No.	Description	Material	Note	
1	**Body**	Aluminium alloy	Hard anodised	
2	**Piston A**	Aluminium alloy	Ø 16	
3	**Piston B**	Aluminium alloy	Ø 16	
4	**Piston**	Aluminium alloy	Ø 20 to Ø 100	
5	**Piston rod**	Stainless steel	Ø 16 to Ø 25	
		Carbon steel	Ø 32 to Ø 100	Hard chrome plating
6	**Collar**	Aluminium alloy	Chromated	
7	**Head cover**	Aluminium alloy	Chromated	
8	**Guide rod**	Carbon steel	Hard chrome plating	
9	**Plate**	Carbon steel	Nickel plating	
10	**Plate mounting bolt**	Carbon steel	Nickel plating	
11	**Guide bolt**	Carbon steel	Nickel plating	
12	**Retaining ring**	Carbon tool steel	Phosphate coated	
13	**Retaining ring**	Carbon tool steel	Phosphate coated	
14	**Magnet**	—		
15	**Plug**	Carbon steel	Ø 16	Nickel plating
	Hexagon socket head plug		Ø 20 to Ø 100	
16	**Slide bearing**	Bearing alloy		
17	**Ball bushing**	—		
18	**Spacer**	Aluminium alloy		
19	**Cushion ring**	Aluminium alloy	Ø 25 to Ø 100	Anodised
20	**Cushion valve**		Ø 16 to Ø 32	Electroless nickel plating
			Ø 50 to Ø 100	Chromated
	Cushion needle		Ø 40 only	Electroless nickel plating

∗: A felt is not installed on the slide bearing.

Component Parts

No.	Description	Material	Note	
21	**Gasket**	NBR	Ø 16	
22	**Gasket**	NBR		
23	**Retaining ring**	Carbon tool steel	Ø 50, Ø 63	Phosphate coated
24	**Steel ball**	Carbon steel	Ø 16 to Ø 50	
25	**Plug**	Carbon steel	Ø 63 to Ø 100	Nickel plating
26∗	**Piston seal**	NBR		
27∗	**Rod seal**	NBR		
28∗	**Cushion seal**	Urethane		
29∗	**Gasket A**	NBR		
30∗	**Gasket B**	NBR		

Replacement Parts/Seal Kit

Bore size [mm]	Kit no.	Contents
16	MGP16-AZ-PS	Set of nos. above ㉖, ㉗, ㉘, ㉙, ㉚
20	MGP20-AZ-PS	
25	MGP25-AZ-PS	
32	MGP32-AZ-PS	
40	MGP40-AZ-PS	

Bore size [mm]	Kit no.	Contents
50	MGP50-AZ-PS	Set of nos. above ㉖, ㉗, ㉘, ㉙, ㉚
63	MGP63-AZ-PS	
80	MGP80-AZ-PS	
100	MGP100-AZ-PS	

∗: Seal kit includes ㉖ to ㉚. Order the seal kit, based on each bore size.
∗: Since the seal kit does not include a grease pack, order it separately.
Grease pack part no.: GR-S-010 (10 g)

Specifications are subject to change without prior notice and any obligation on the part of the manufacturer.

SMC CORPORATION Zuazobidea 14, 01012, Vitoria-Gasteiz, Álava +34 945184100 +34 945184126 www.smc.eu support.marketingeurope@smc.com

Additional information

Catalogue	MGP-Z-Dd_EU.pdf#page=30
Operation manuals	OM_MGP-Z_MGPx-OM0047PEN-B.pdf

Specifications are subject to change without prior notice and any obligation on the part of the manufacturer.

SMC CORPORATION Zuazobidea 14, 01012, Vitoria-Gasteiz, Álava +34 945184100 +34 945184126 www.smc.eu support.marketingeurope@smc.com