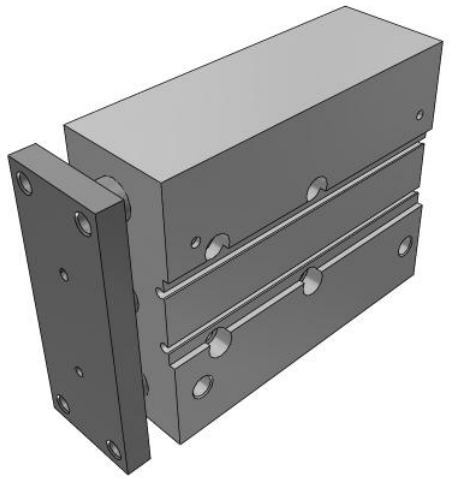

# MGP-AZ, Compact Guide Cylinder, Air Cushion

## MGPA32TF-75AZ

Datasheet

## General series information

- With Air Cushion.
- 3 types of bearing can be selected: slide bearing, ball bushing and high precision ball bushing.
- Compactness & Lightness
- Bore size: 16, 20, 25, 32, 40, 50, 63, 80, 100 (mm)
- Strokes from 10 to 400mm (depending upon bore size)
- Auto switches can be mounted on 2 surfaces.

*Double-acting, single-rod cylinder*

## Standard specifications

| | |
|---|---|
| Bearing Type | A (High Precision Ball Bushing) |
| Bore Size | Ø32 mm |
| Port Thread | TF [G] |
| Stroke | 75 mm |
| Auto Switch | No Switch |
| Lead Wire or Pre-wired Connector | 0.5 m (Or None in the Case of No Switch) |
| Number | 2 pcs. (Or None in the Case of No Switch) |
| Made to Order | None |
| Pressure medium | Air |
| Maximum temperature of pressure medium | 60 ºC |
| Minimum temperature of pressure medium | -10 ºC (No freezing) |
| Maximum operating pressure | 1.0 MPa |
| Minimum operating pressure | 0.12 MPa |
| Proof pressure | 1.5 MPa |
| Maximum ambient temperature | 60 ºC |
| Maximum ambient temperature with magnet | -10 ºC (No freezing) |
| Number of pneumatic connections | 4 pcs. |

*Specifications are subject to change without prior notice and any obligation on the part of the manufacturer.*



**SMC CORPORATION** Zuazobidea 14, 01012, Vitoria-Gasteiz, Álava +34 945184100 +34 945184126 www.smc.eu support.marketingeurope@smc.com

| | |
|---|---|
| Pneumatic input connection | G 1/8 |
| Pneumatic output connection | G 1/8 |
| Mode of operation of drive | Double acting |
| Theoretical cylinder force, advance stroke (at 0.5 MPa) | 402 N |
| Theoretical cylinder force, return stroke (at 0.5 MPa) | 325 N |
| Maximum piston speed | 500 mm/s |
| Type of cushioning | Air cushion on both ends (Without bumper) |
| Non-rotating accuracy of plate | ± 0.01 º |
| Weight | 2.290 Kg |

Specifications are subject to change without prior notice and any obligation on the part of the manufacturer.



SMC CORPORATION Zuazobidea 14, 01012, Vitoria-Gasteiz, Álava +34 945184100 +34 945184126 www.smc.eu support.marketingeurope@smc.com

# Dimensions

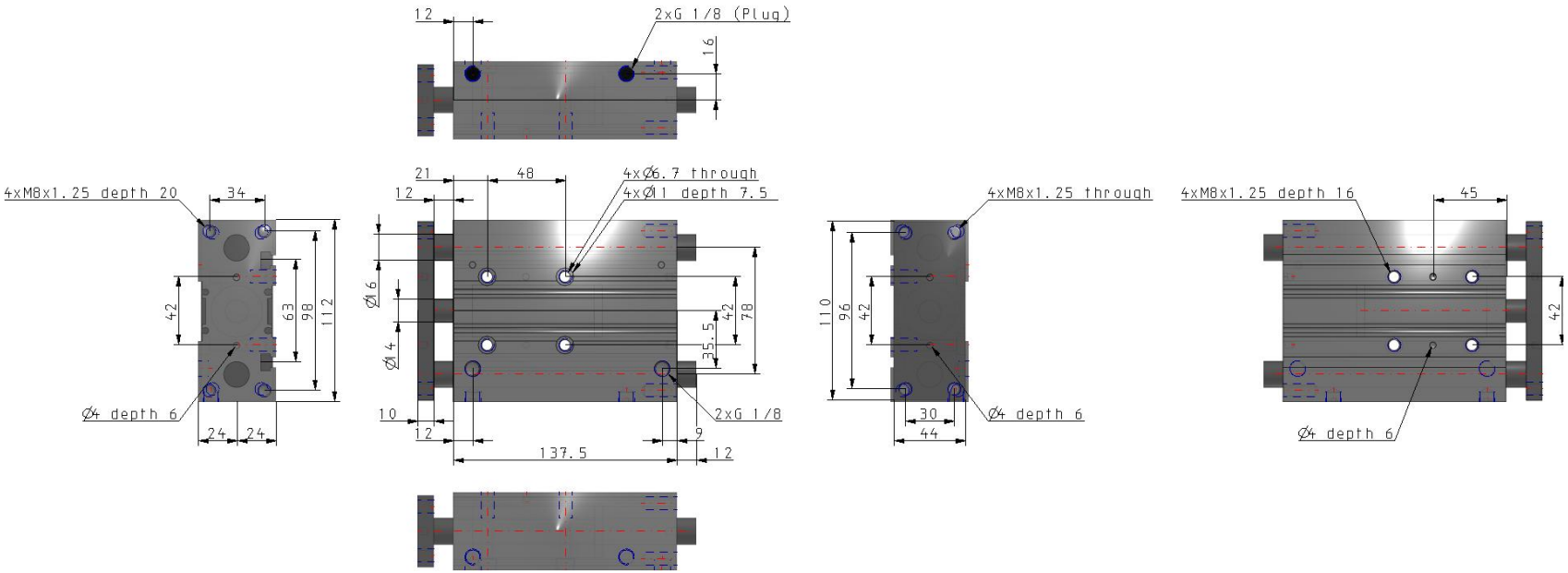


Specifications are subject to change without prior notice and any obligation on the part of the manufacturer.



**SMC CORPORATION** Zuazobidea 14, 01012, Vitoria-Gasteiz, Álava +34 945184100 +34 945184126 www.smc.eu support.marketingeurope@smc.com

# Constructions

## MGPM

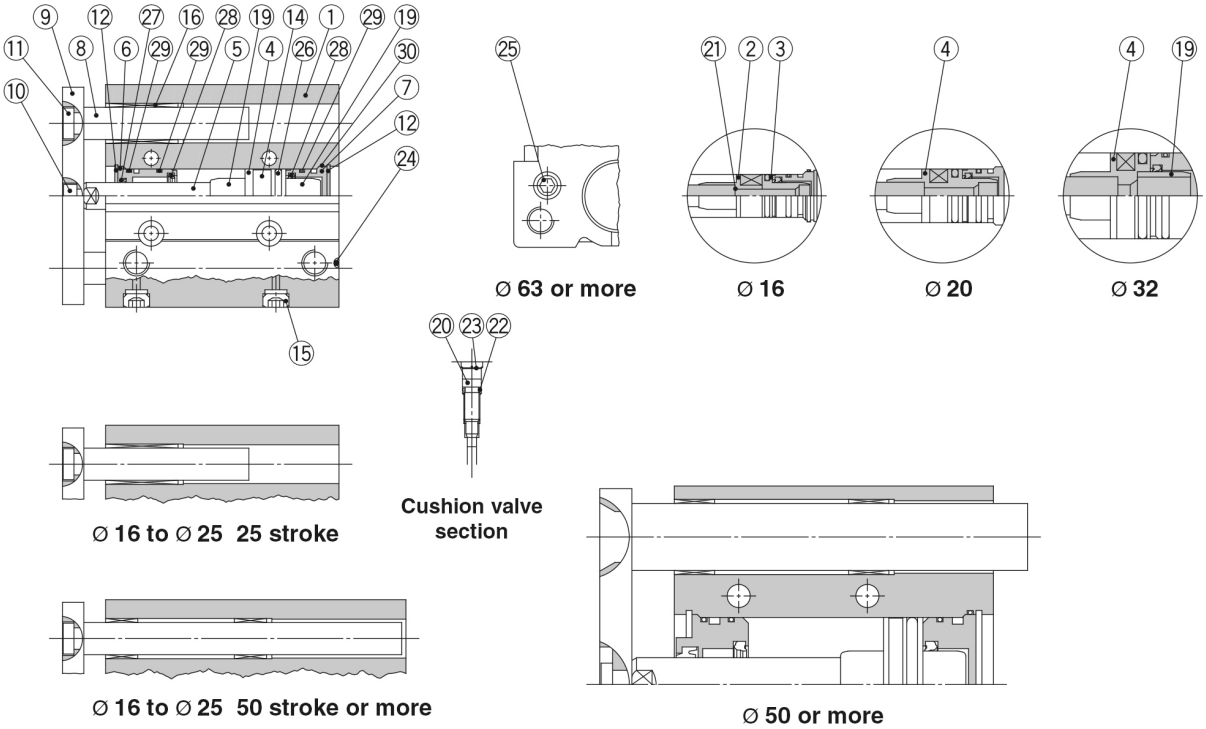


### Component Parts

| No. | Description | Material | Note | |
|---|---|---|---|---|
| 1 | **Body** | Aluminium alloy | Hard anodised | |
| 2 | **Piston A** | Aluminium alloy | Ø 16 | |
| 3 | **Piston B** | Aluminium alloy | Ø 16 | |
| 4 | **Piston** | Aluminium alloy | Ø 20 to Ø 100 | |
| 5 | **Piston rod** | Stainless steel | Ø 16 to Ø 25 | |
| | | Carbon steel | Ø 32 to Ø 100 | Hard chrome plating |
| 6 | **Collar** | Aluminium alloy | Chromated | |
| 7 | **Head cover** | Aluminium alloy | Chromated | |
| 8 | **Guide rod** | Carbon steel | Hard chrome plating | |
| 9 | **Plate** | Carbon steel | Nickel plating | |
| 10 | **Plate mounting bolt** | Carbon steel | Nickel plating | |
| 11 | **Guide bolt** | Carbon steel | Nickel plating | |
| 12 | **Retaining ring** | Carbon tool steel | Phosphate coated | |
| 13 | **Retaining ring** | Carbon tool steel | Phosphate coated | |
| 14 | **Magnet** | — | | |
| 15 | **Plug** | Carbon steel | Ø 16 | Nickel plating |
| | **Hexagon socket head plug** | | Ø 20 to Ø 100 | |
| 16 | **Slide bearing** | Bearing alloy | | |
| 17 | **Ball bushing** | — | | |
| 18 | **Spacer** | Aluminium alloy | | |
| 19 | **Cushion ring** | Aluminium alloy | Ø 25 to Ø 100 | Anodised |
| 20 | **Cushion valve** | | Ø 16 to Ø 32 | Electroless nickel plating |
| | | | Ø 50 to Ø 100 | Chromated |
| | **Cushion needle** | | Ø 40 only | Electroless nickel plating |

*: A felt is not installed on the slide bearing.

### Component Parts

| No. | Description | Material | Note | |
|---|---|---|---|---|
| 21 | **Gasket** | NBR | Ø 16 | |
| 22 | **Gasket** | NBR | | |
| 23 | **Retaining ring** | Carbon tool steel | Ø 50, Ø 63 | Phosphate coated |
| 24 | **Steel ball** | Carbon steel | Ø 16 to Ø 50 | |
| 25 | **Plug** | Carbon steel | Ø 63 to Ø 100 | Nickel plating |
| 26* | **Piston seal** | NBR | | |
| 27* | **Rod seal** | NBR | | |
| 28* | **Cushion seal** | Urethane | | |
| 29* | **Gasket A** | NBR | | |
| 30* | **Gasket B** | NBR | | |

### Replacement Parts/Seal Kit

| Bore size [mm] | Kit no. | Contents |
|---|---|---|
| **16** | MGP16-AZ-PS | Set of nos. above ㉖, ㉗, ㉘, ㉙, ㉚ |
| **20** | MGP20-AZ-PS | |
| **25** | MGP25-AZ-PS | |
| **32** | MGP32-AZ-PS | |
| **40** | MGP40-AZ-PS | |

| Bore size [mm] | Kit no. | Contents |
|---|---|---|
| **50** | MGP50-AZ-PS | Set of nos. above ㉖, ㉗, ㉘, ㉙, ㉚ |
| **63** | MGP63-AZ-PS | |
| **80** | MGP80-AZ-PS | |
| **100** | MGP100-AZ-PS | |

*: Seal kit includes ㉖ to ㉚. Order the seal kit, based on each bore size.
*: Since the seal kit does not include a grease pack, order it separately.
**Grease pack part no.: GR-S-010** (10 g)

Specifications are subject to change without prior notice and any obligation on the part of the manufacturer.



SMC CORPORATION Zuazobidea 14, 01012, Vitoria-Gasteiz, Álava +34 945184100 +34 945184126 www.smc.eu support.marketingeurope@smc.com

## Additional information

| | |
|---|---|
| Catalogue | MGP-Z-Dd_EU.pdf#page=30 |
| Operation manuals | OM_MGP-Z_MGPx-OM0047PEN-B.pdf |

Specifications are subject to change without prior notice and any obligation on the part of the manufacturer.



SMC CORPORATION Zuazobidea 14, 01012, Vitoria-Gasteiz, Álava +34 945184100 +34 945184126 www.smc.eu support.marketingeurope@smc.com