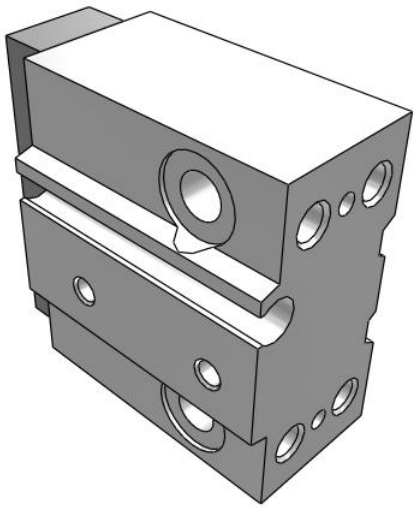

MGJ, Miniature Guide Rod Cylinder
MGJ10-7

Datasheet

General series information

Series MGJ miniature guide rod cylinder is ideal for applications requiring high side load and high non-rotational accuracy (±0.1°). Rubber bumpers are standard. Two auto switches can be mounted with as little as 5mm of stroke.

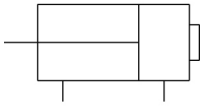

Double-acting cylinder, rear boss mount, single piston rod

Standard specifications

Bore Size	10 mm
Stroke	7 mm
Auto Switch	None
Lead Wire	0.5 m (Or None in the Case of No Switch)
Number	2 pcs. (Or None in Case of No Switch)
Pressure medium	Air
Maximum operating pressure	0.7 MPa
Minimum operating pressure	0.15 MPa
Proof pressure	1.05 MPa
Maximum ambient temperature	60 °C
Minimum ambient temperature	- 10 °C
Conform to the European RoHS Directive	Conform
Maximum piston speed	500 mm/s
Type of cushioning	Rubber bumper at both ends
Minimum piston speed	50 mm/s
Port size	M3
Lubrication	Non-lube
Stroke length tolerance	+ 1.0-0 mm
Thread Tolerance	JIS class 2
Action	Double Acting
Guide size	ø6

Specifications are subject to change without prior notice and any obligation on the part of the manufacturer.

SMC CORPORATION Zuazobidea 14, 01012, Vitoria-Gasteiz, Álava +34 945184100 +34 945184126 www.smc.eu support.marketingeurope@smc.com

Weight	0.048 Kg

Specifications are subject to change without prior notice and any obligation on the part of the manufacturer.

SMC CORPORATION Zuazobidea 14, 01012, Vitoria-Gasteiz, Álava +34 945184100 +34 945184126 www.smc.eu support.marketingeurope@smc.com

Dimensions

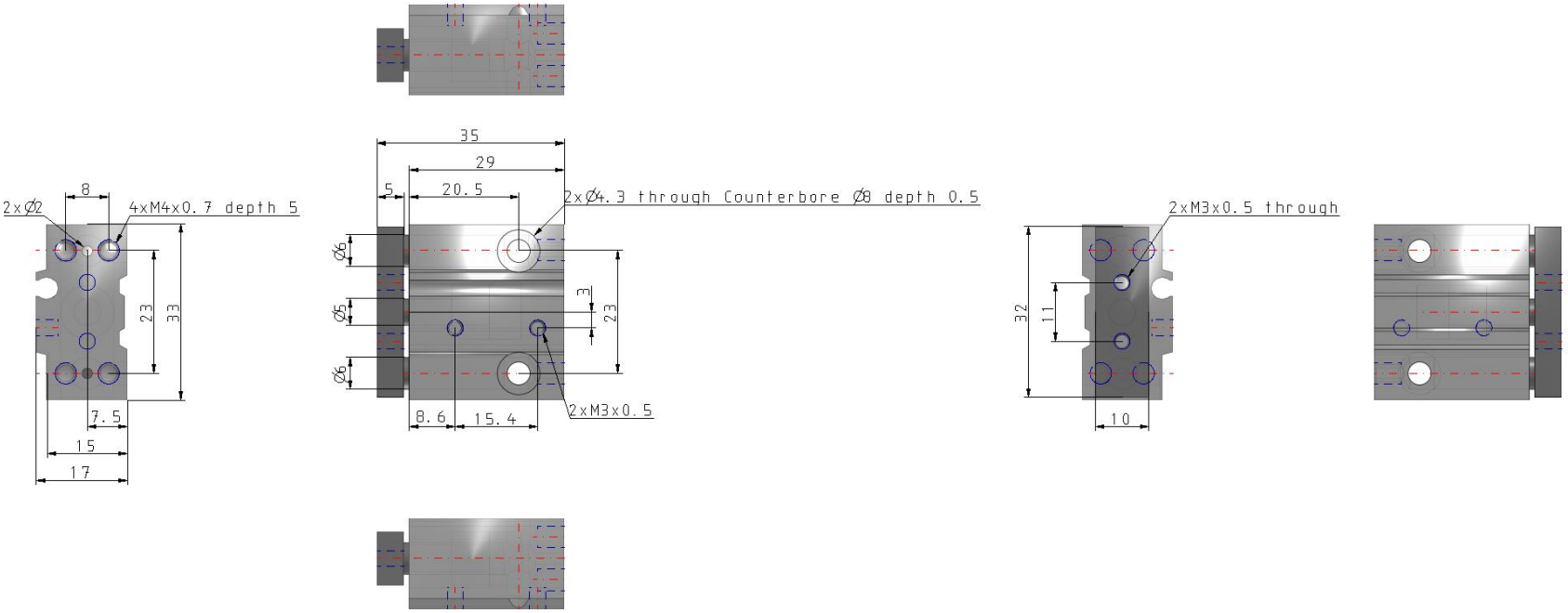

Specifications are subject to change without prior notice and any obligation on the part of the manufacturer.

SMC CORPORATION Zuazobidea 14, 01012, Vitoria-Gasteiz, Álava +34 945184100 +34 945184126 www.smc.eu support.marketingeurope@smc.com

Constructions

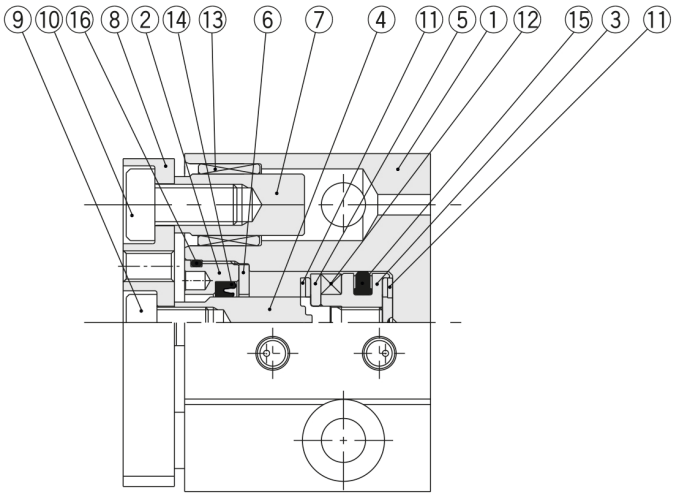

Parts list

No.	Description	Material	Note
1	Body	Aluminum alloy	Hard anodized
2	Rod cover	Aluminum alloy	Chromated
3	Piston	Aluminum alloy	Chromated
4	Piston rod	Stainless steel	
5	Magnet retainer	Aluminum alloy	Chromated, in case of Ø 6
		Stainless steel	In case of Ø 10
6	Seal retainer	Aluminum alloy	Chromated, in case of Ø 6
		Stainless steel	In case of Ø 10
7	Guide rod	Constructional steel	Hard chromium electroplated
8	Plate	Aluminum alloy	Hard anodized
9	Torque socket head bolt	Constructional steel	Nickel plated, in case of Ø 6
	Hexagon socket head cap screw	Constructional steel	Nickel plated, in case of Ø 10
10	Brazier head hexagon socket bolt	Constructional steel	Nickel plated
11	Bumper	Resin	
12	Magnet	Magnet	
13	Bushing	Sintered oil-impregnated beaning	
14	Rod seal	NBR	
15	Piston seal	NBR	
16	O-ring	NBR	

Specifications are subject to change without prior notice and any obligation on the part of the manufacturer.

SMC CORPORATION Zuazobidea 14, 01012, Vitoria-Gasteiz, Álava +34 945184100 +34 945184126 www.smc.eu support.marketingeurope@smc.com

Additional information

Catalogue	MGJ_EU.pdf
Operation manuals	OM_MGJ_OM0001OEN.pdf

Specifications are subject to change without prior notice and any obligation on the part of the manufacturer.

SMC CORPORATION Zuazobidea 14, 01012, Vitoria-Gasteiz, Álava +34 945184100 +34 945184126 www.smc.eu support.marketingeurope@smc.com