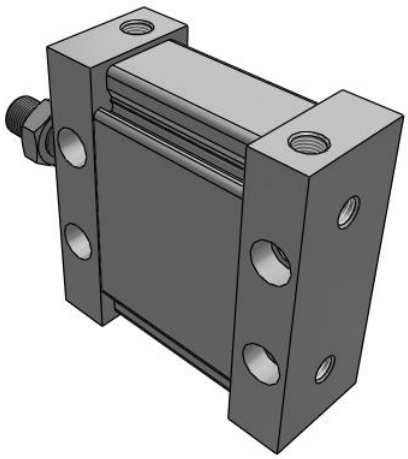

M(D)U Plate Cylinder, Double Acting, Single Rod w/Auto Switch Mounting Groove

MDUB63TF-45DMZ

Datasheet

General series information

- Plate Cylinder, Double Acting, Single Rod.
- Reduced labour when mounting the switch.
- Auto-switch doesn´t protrude.
- It´s possible to mount the autoswitches in four directions.
- A maximum 62% width reduction.

Double-acting, single-rod cylinder

Standard specifications

Magnet	D (Built-in)
Mounting	B (Basic)
Size	63 (Equiv. Ø63 Piston Area)
Port Thread Type	TF (G)
Stroke	45
Rod End	M (Male Thread)
Auto Switch	None
Lead Wire or Prewired Connector	0.5m (Or None in the Case of No Switch)
Number	2 pcs. (Or None in the Case of No Switch)
Maximum operating pressure	0.7 MPa
Minimum operating pressure	0.05 MPa
Proof pressure	1.05 MPa
Mode of operation of drive	Double acting
Theoretical cylinder force, advance stroke (at 0.5 MPa)	1559 N
Theoretical cylinder force, return stroke (at 0.5 MPa)	1402 N
Maximum piston speed	500 mm/s
Type of cushioning	Rubber bumper
Minimum piston speed	50 mm/s

Specifications are subject to change without prior notice and any obligation on the part of the manufacturer.

SMC CORPORATION Zuazobidea 14, 01012, Vitoria-Gasteiz, Álava +34 945184100 +34 945184126 www.smc.eu support.marketingeurope@smc.com

Lubrication	Not required (non-lube)
Allowable rotational torque	2.0 N·m
Maximum ambient and fluid temperature	60 °C
Minimum ambient and fluid temperature	- 10 °C
Fluid	Air
Rod non-rotating accuracy	±0.5°
Stroke length tolerance	+1.4 0

Specifications are subject to change without prior notice and any obligation on the part of the manufacturer.

SMC CORPORATION Zuazobidea 14, 01012, Vitoria-Gasteiz, Álava +34 945184100 +34 945184126 www.smc.eu support.marketingeurope@smc.com

Dimensions

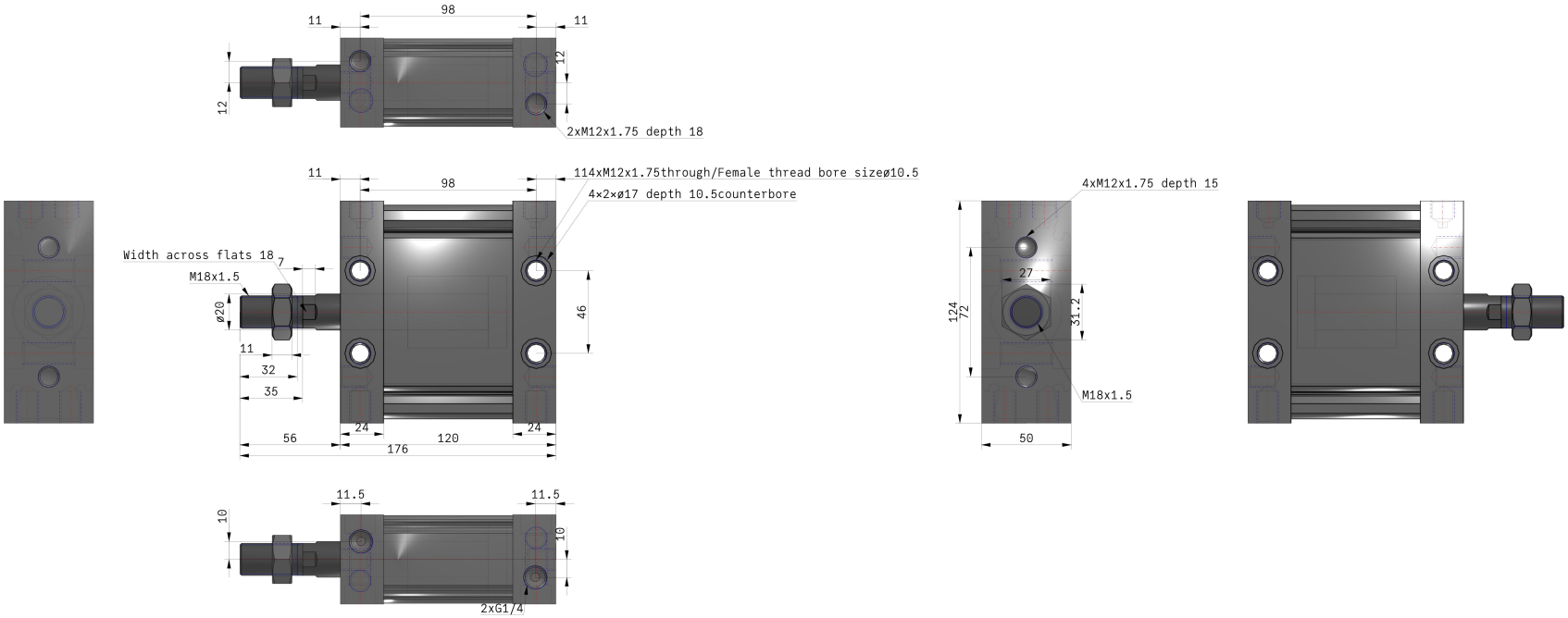

Specifications are subject to change without prior notice and any obligation on the part of the manufacturer.

SMC CORPORATION Zuazobidea 14, 01012, Vitoria-Gasteiz, Álava +34 945184100 +34 945184126 www.smc.eu support.marketingeurope@smc.com

Constructions

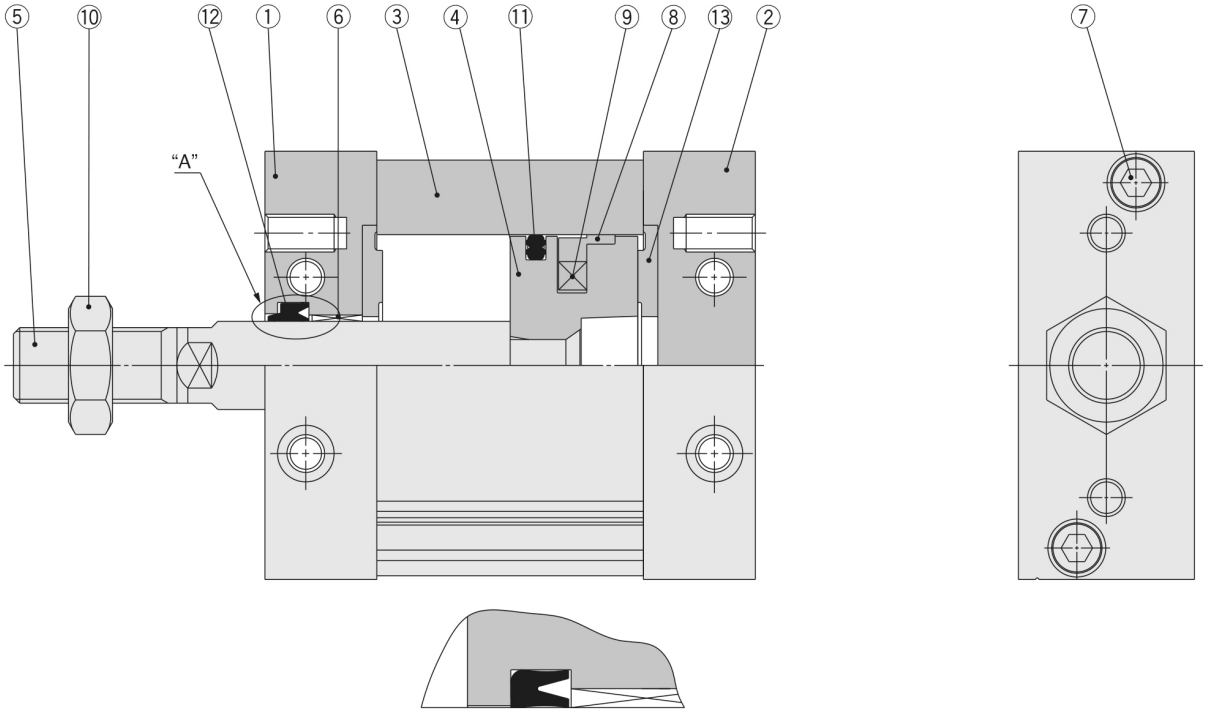

"A" section **MU□25**

Component Parts

No.	Description	Material	Note
1	**Rod cover**	Aluminum alloy	Anodised
2	**Head cover**	Aluminum alloy	Anodised
3	**Cylinder tube**	Aluminum alloy	Hard anodised
4	**Piston**	Aluminum die-casted	Chromated
5	**Piston rod**	Carbon steel	Hard chrome plated
6	**Bushing**	Oil-impregnated sintered alloy	
7	**Hexagon socket head bolt**	Stainless steel	
8	**Wear ring**	Resin	
9	**Magnet**	—	Only built-in magnet type
10	**Rod end nut**	Rolled steel	Only attached to rod end male thread
11	**Piston seal**	NBR	
12	**Rod seal**	NBR	
13	**Bumper**	Urethane	

Specifications are subject to change without prior notice and any obligation on the part of the manufacturer.

SMC CORPORATION Zuazobidea 14, 01012, Vitoria-Gasteiz, Álava +34 945184100 +34 945184126 www.smc.eu support.marketingeurope@smc.com

Additional information

Catalogue MU-Z_EU.pdf

Specifications are subject to change without prior notice and any obligation on the part of the manufacturer.

SMC CORPORATION Zuazobidea 14, 01012, Vitoria-Gasteiz, Álava +34 945184100 +34 945184126 www.smc.eu support.marketingeurope@smc.com