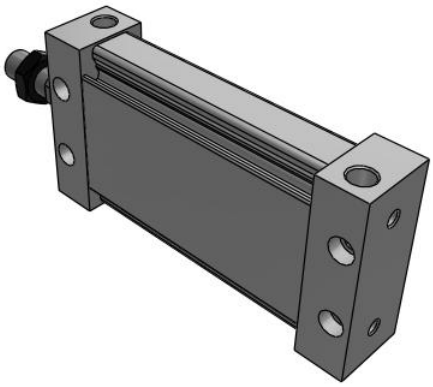

# M(D)U Plate Cylinder, Double Acting, Single Rod w/Auto Switch Mounting Groove

## MDUB32TF-75DMZ

Datasheet

## General series information

- Plate Cylinder, Double Acting, Single Rod.
- Reduced labour when mounting the switch.
- Auto-switch doesn´t protrude.
- It´s possible to mount the autoswitches in four directions.
- A maximum 62% width reduction.

*Double-acting, single-rod cylinder*

## Standard specifications

| | |
|---|---|
| Magnet | D (Built-in) |
| Mounting | B (Basic) |
| Size | 32 (Equiv. Ø32 Piston Area) |
| Port Thread | TF (G) |
| Stroke | 75 |
| Rod End | M (Male Thread) |
| Auto Switch | None |
| Lead Wire or Pre-wired Connector | 0.5 m (Or None in the Case of No Switch) |
| Number | 2 pcs. (Or None in Case of No Switch) |
| Maximum operating pressure | 0.7 MPa |
| Minimum operating pressure | 0.05 MPa |
| Proof pressure | 1.05 MPa |
| Mode of operation of drive | Double acting |
| Theoretical cylinder force, advance stroke (at 0.5 MPa) | 402 N |
| Theoretical cylinder force, return stroke (at 0.5 MPa) | 325 N |
| Maximum piston speed | 500 mm/s |
| Type of cushioning | Rubber Bumper |
| Minimum piston speed | 50 mm/s |

Specifications are subject to change without prior notice and any obligation on the part of the manufacturer.



SMC CORPORATION Zuazobidea 14, 01012, Vitoria-Gasteiz, Álava +34 945184100 +34 945184126 www.smc.eu support.marketingeurope@smc.com

| | |
|---|---|
| Lubrication | Not required (non-lube) |
| Allowable rotational torque | 0.25 N·m |
| Maximum ambient and fluid temperature | 60 °C |
| Minimum ambient and fluid temperature | - 10 °C |
| Fluid | Air |
| Rod non-rotating accuracy | ±0.8° |
| Stroke length tolerance | +1.4<br>0 |
| Weight | 0.522 Kg |

Specifications are subject to change without prior notice and any obligation on the part of the manufacturer.



SMC CORPORATION Zuazobidea 14, 01012, Vitoria-Gasteiz, Álava +34 945184100 +34 945184126 www.smc.eu support.marketingeurope@smc.com

# Dimensions

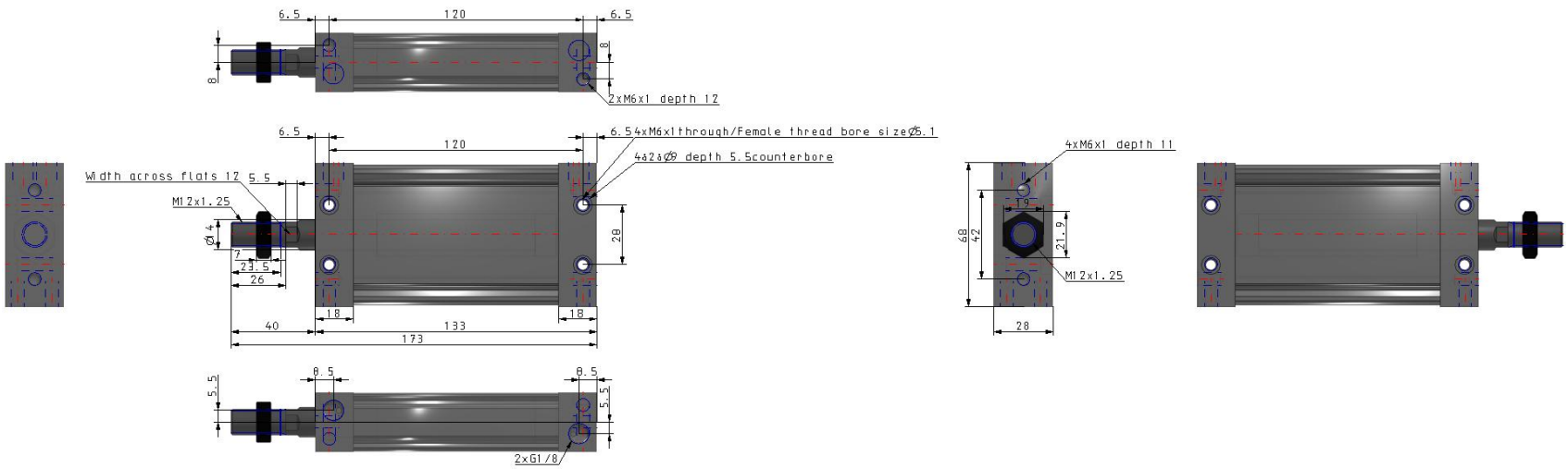


Specifications are subject to change without prior notice and any obligation on the part of the manufacturer.



SMC CORPORATION Zuazobidea 14, 01012, Vitoria-Gasteiz, Álava +34 945184100 +34 945184126 www.smc.eu support.marketingeurope@smc.com

# Constructions

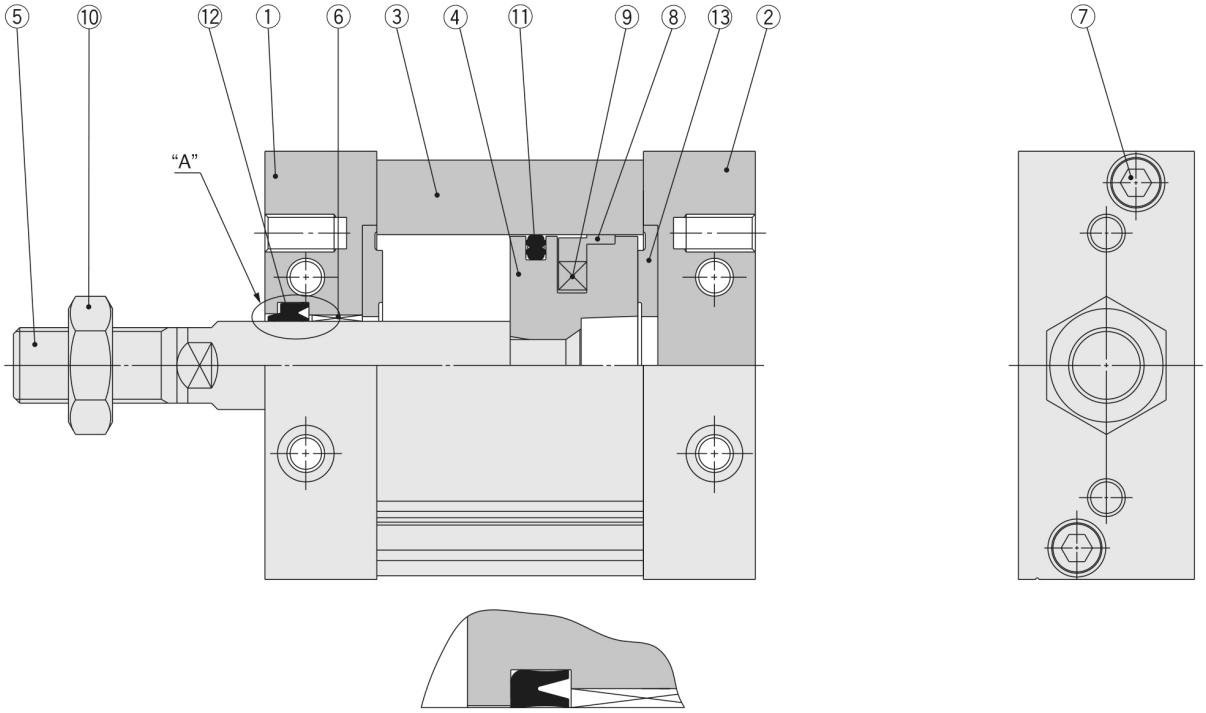


## Component Parts

| No. | Description | Material | Note |
|---|---|---|---|
| 1 | **Rod cover** | Aluminum alloy | Anodised |
| 2 | **Head cover** | Aluminum alloy | Anodised |
| 3 | **Cylinder tube** | Aluminum alloy | Hard anodised |
| 4 | **Piston** | Aluminum die-casted | Chromated |
| 5 | **Piston rod** | Carbon steel | Hard chrome plated |
| 6 | **Bushing** | Oil-impregnated sintered alloy | |
| 7 | **Hexagon socket head bolt** | Stainless steel | |
| 8 | **Wear ring** | Resin | |
| 9 | **Magnet** | — | Only built-in magnet type |
| 10 | **Rod end nut** | Rolled steel | Only attached to rod end male thread |
| 11 | **Piston seal** | NBR | |
| 12 | **Rod seal** | NBR | |
| 13 | **Bumper** | Urethane | |

*Specifications are subject to change without prior notice and any obligation on the part of the manufacturer.*



**SMC CORPORATION** Zuazobidea 14, 01012, Vitoria-Gasteiz, Álava +34 945184100 +34 945184126 www.smc.eu support.marketingeurope@smc.com

## Additional information

| | |
|---|---|
| Catalogue | MU-Z_EU.pdf |

Specifications are subject to change without prior notice and any obligation on the part of the manufacturer.



SMC CORPORATION Zuazobidea 14, 01012, Vitoria-Gasteiz, Álava +34 945184100 +34 945184126 www.smc.eu support.marketingeurope@smc.com