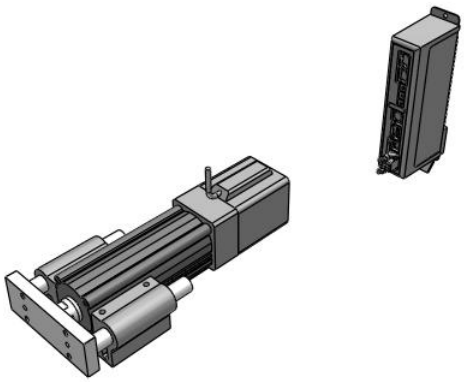

Standard Type - LEYG
LEYG32MDA-50C-R5CE18

Datasheet

General series information

- Body size: 16, 25, 32 and 40 mm.
- Stroke: 30 to 300 mm.
- Speed control/Positioning: Max. 64 points.
- Positioning and pushing control can be selected.

Standard specifications

Size	32
Bearing	M (Slide Bearing)
Mounting Position	D (In-line)
Motor	Step Motor (Servo 24 VDC)
Lead Screw	A (Size 16: 10 mm, Size 25: 12 mm, Size 32: 16 mm)
Stroke	50 mm
Motor Option	C (w/Motor Cover)
Guide Option	Without Option
Actuator Cable	R (Robotic Flexible Cable)
Actuator Cable Length	5 (5m)
Controller	C (JXC, Step Motor Controller)
I/O cabling for LEC controllers	Without Cable
Protocol	E (EtherCAT®)
Suffix	1 (For Single Axis)
Controller Mounting	8 (DIN Rail)
I/O cabling for JXC Controllers and communication plug connector	None
Maximum ambient temperature	40 °C
Minimum ambient temperature	5 °C

Specifications are subject to change without prior notice and any obligation on the part of the manufacturer.

SMC CORPORATION Zuazobidea 14, 01012, Vitoria-Gasteiz, Álava +34 945184100 +34 945184126 www.smc.eu support.marketingeurope@smc.com

General power supply	24 V DC
Approvals	CE
Pushing speed	30 mm/s or less
Impact/Vibration resistance	50/20 m/s2
Encoder	Incremental A/B phase (800 pulse/rotation)
Horizontal work load	40 kg
Vertical work load	9 kg
Speed	24 - 500 mm/s
Max. Acceleration/deceleration	3000 mm/s2
Positioning repeatability	± 0.02 mm
Lost motion	0.1 max.
Pushing force	80 - 189 N

Specifications are subject to change without prior notice and any obligation on the part of the manufacturer.

SMC CORPORATION Zuazobidea 14, 01012, Vitoria-Gasteiz, Álava +34 945184100 +34 945184126 www.smc.eu support.marketingeurope@smc.com

Dimensions

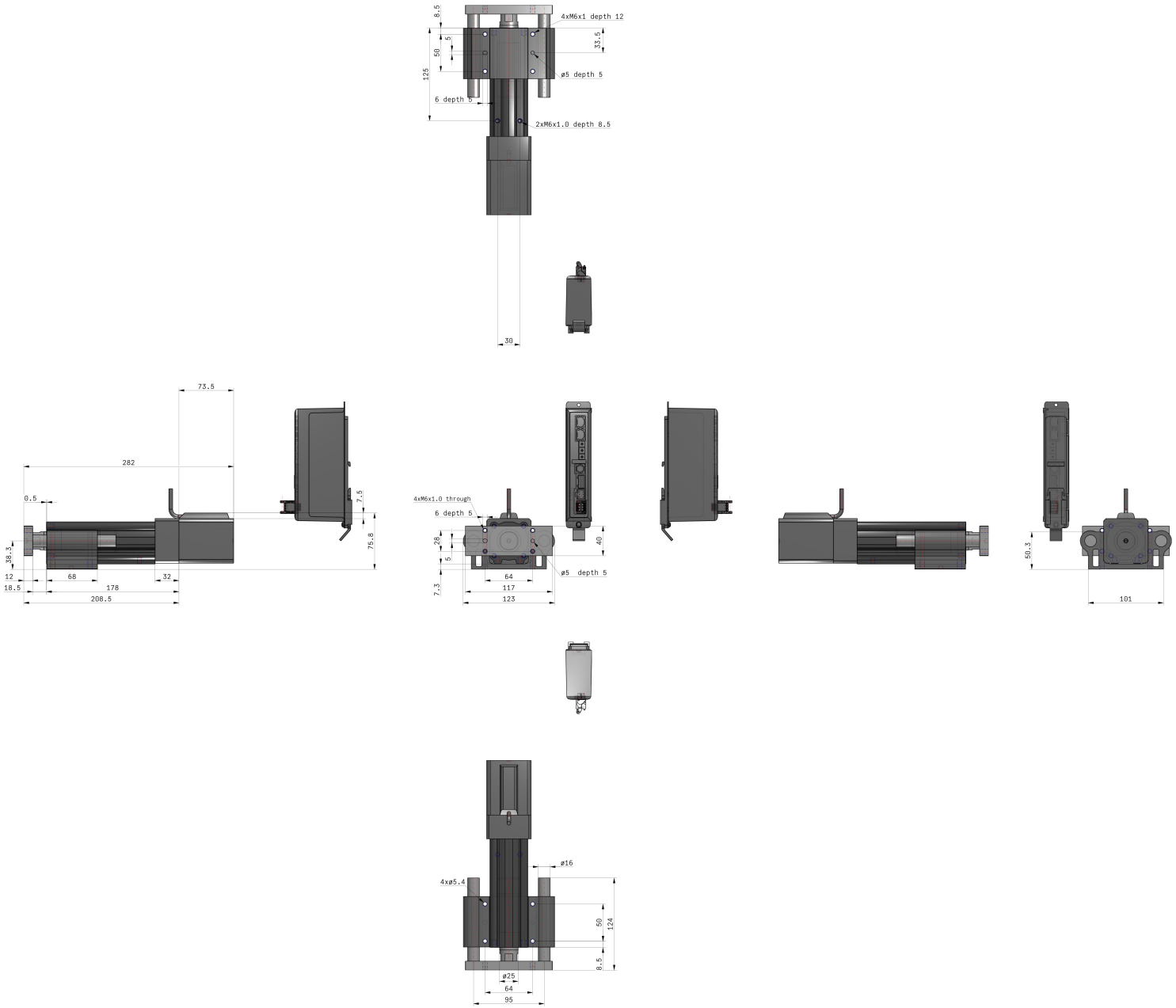

Specifications are subject to change without prior notice and any obligation on the part of the manufacturer.

SMC CORPORATION Zuazobidea 14, 01012, Vitoria-Gasteiz, Álava +34 945184100 +34 945184126 www.smc.eu support.marketingeurope@smc.com

Constructions

Motor top mounting type

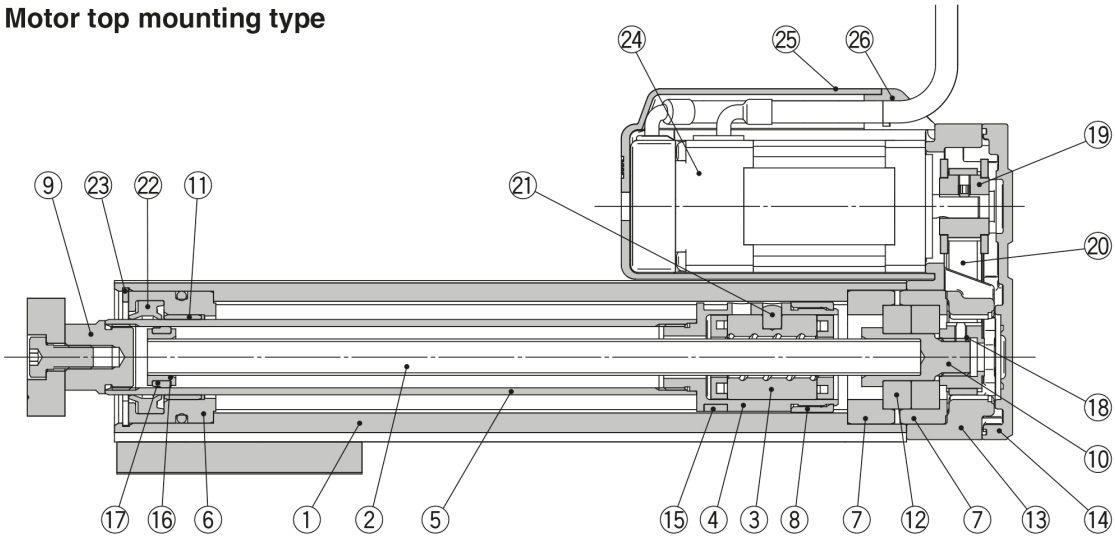

Motor top mounting type
With lock/motor cover

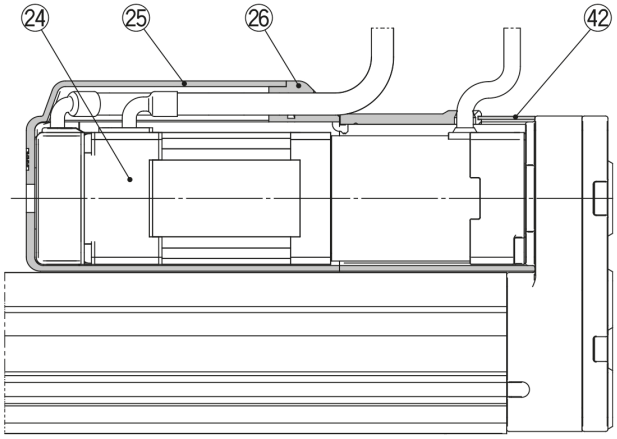

In-line motor type

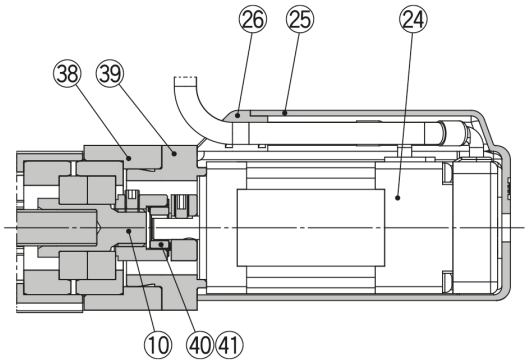

In-line motor type
With lock/motor cover

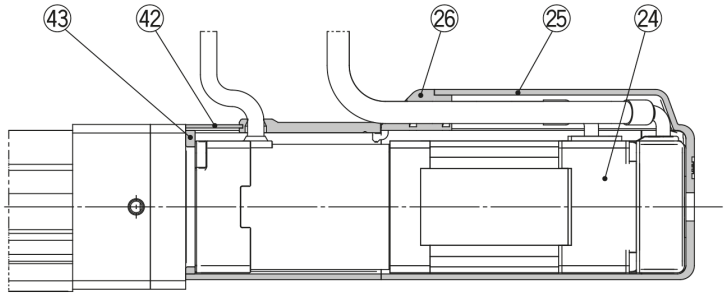

Specifications are subject to change without prior notice and any obligation on the part of the manufacturer.

SMC CORPORATION Zuazobidea 14, 01012, Vitoria-Gasteiz, Álava +34 945184100 +34 945184126 www.smc.eu support.marketingeurope@smc.com

LEYG□M

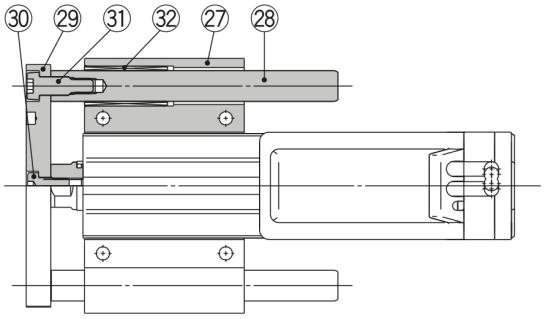

LEYG16/25/32/40M: 50st or less

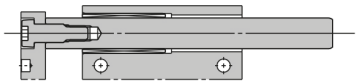

LEYG16/25/32/40M: Over 50st

When grease retaining function selected

LEYG25/32/40M□□A/B/C-□□F: 50st or less

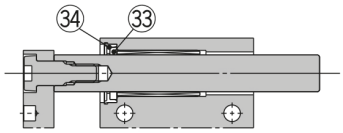

LEYG25/32/40M□□A/B/C-□□F: Over 50st

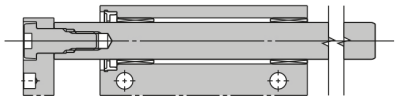

LEYG□L

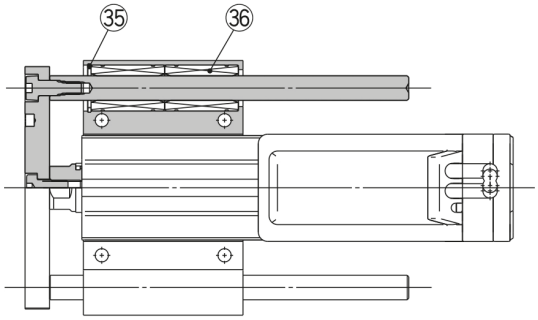

LEYG16L: 30st or less
LEYG25/32/40L: 100st or less

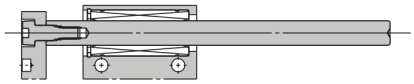

LEYG16L: Over 30st, 100st or less

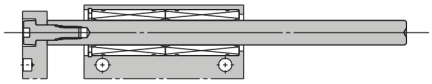

LEYG16/25/32/40L: Over 100st

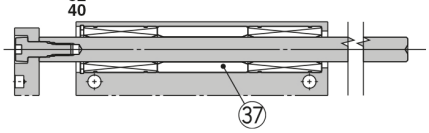

Component Parts

No.	Description	Material	Note
1	**Body**	Aluminium alloy	Anodised
2	**Ball screw shaft**	Alloy steel	
3	**Ball screw nut**	Synthetic resin/Alloy steel	
4	**Piston**	Aluminium alloy	
5	**Piston rod**	Stainless steel	Hard chrome plating
6	**Rod cover**	Aluminium alloy	
7	**Bearing holder**	Aluminium alloy	
8	**Rotation stopper**	POM	
9	**Socket**	Free cutting carbon steel	Nickel plating
10	**Connected shaft**	Free cutting carbon steel	Nickel plating
11	**Bushing**	Bearing alloy	
12	**Bearing**	—	
13	**Return box**	Aluminium die-cast	Coating
14	**Return plate**	Aluminium die-cast	Coating
15	**Magnet**	—	
16	**Wear ring holder**	Stainless steel	Stroke 101 mm or more
17	**Wear ring**	POM	Stroke 101 mm or more
18	**Screw shaft pulley**	Aluminium alloy	
19	**Motor pulley**	Aluminium alloy	
20	**Belt**	—	
21	**Parallel pin**	Stainless steel	
22	**Seal**	NBR	
23	**Retaining ring**	Steel for spring	Phosphate coated
24	**Motor**	—	
25	**Motor cover**	Synthetic resin	Only “With motor cover”
26	**Grommet**	Synthetic resin	Only “With motor cover”
27	**Guide attachment**	Aluminium alloy	Anodised

No.	Description	Material	Note
28	**Guide rod**	Carbon steel	
29	**Plate**	Aluminium alloy	Anodised
30	**Plate mounting cap screw**	Carbon steel	Nickel plating
31	**Guide cap screw**	Carbon steel	Nickel plating
32	**Sliding bearing**	Bearing alloy	
33	**Lube-retainer**	Felt	
34	**Holder**	Resin	
35	**Retaining ring**	Steel for spring	Phosphate coated
36	**Ball bushing**	—	
37	**Spacer**	Aluminium alloy	Chromated
38	**Motor block**	Aluminium alloy	Anodised
39	**Motor adapter**	Aluminium alloy	Anodised/LEY16, 25 only
40	**Hub**	Aluminium alloy	
41	**Spider**	NBR	
42	**Motor cover with lock**	Aluminium alloy	Only “With lock/motor cover”
43	**Cover support**	Aluminium alloy	Only “With lock/motor cover”

Specifications are subject to change without prior notice and any obligation on the part of the manufacturer.

SMC CORPORATION Zuazobidea 14, 01012, Vitoria-Gasteiz, Álava +34 945184100 +34 945184126 www.smc.eu support.marketingeurope@smc.com

Additional information

Catalogue	LEY-F_EU.pdf
Declaration of conformity	newDoC_LEY_TF125-487EN.pdf newDoc_LEY_LEYG_stepDC-servoDC_EN-A.pdf
Installation manuals	IM_LEYG_StepDC_EN-C.pdf
Operation manuals	OM_LEY_LEYG_stepDC_servoDC_EN.pdf

Specifications are subject to change without prior notice and any obligation on the part of the manufacturer.

SMC CORPORATION Zuazobidea 14, 01012, Vitoria-Gasteiz, Álava +34 945184100 +34 945184126 www.smc.eu support.marketingeurope@smc.com