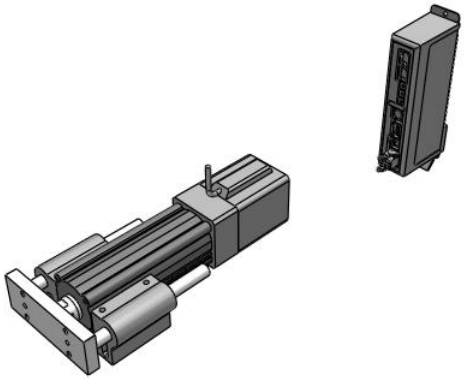

# Standard Type - LEYG
## LEYG32LDA-50C-R5CE18

Datasheet

## General series information

- Body size: 16, 25, 32 and 40 mm.
- Stroke: 30 to 300 mm.
- Speed control/Positioning: Max. 64 points.
- Positioning and pushing control can be selected.

## Standard specifications

| | |
|---|---|
| Size | 32 |
| Bearing | L (Ball Bushing Bearing) |
| Mounting Position | D (In-line) |
| Motor | Step Motor (Servo 24 VDC) |
| Lead Screw | A (Size 16: 10 mm, Size 25: 12 mm, Size 32: 16 mm) |
| Stroke | 50 mm |
| Motor Option | C (w/Motor Cover) |
| Guide Option | Without Option |
| Actuator Cable | R (Robotic Flexible Cable) |
| Actuator Cable Length | 5 (5m) |
| Controller | C (JXC, Step Motor Controller) |
| I/O cabling for LEC controllers | Without Cable |
| Protocol | E (EtherCAT®) |
| Suffix | 1 (For Single Axis) |
| Controller Mounting | 8 (DIN Rail) |
| I/O cabling for JXC Controllers and communication plug connector | None |
| Maximum ambient temperature | 40 °C |
| Minimum ambient temperature | 5 °C |

Specifications are subject to change without prior notice and any obligation on the part of the manufacturer.



SMC CORPORATION Zuazobidea 14, 01012, Vitoria-Gasteiz, Álava +34 945184100 +34 945184126 www.smc.eu support.marketingeurope@smc.com

| | |
|---|---|
| General power supply | 24 V DC |
| Approvals | CE |
| Pushing speed | 30 mm/s or less |
| Impact/Vibration resistance | 50/20 m/s2 |
| Encoder | Incremental A/B phase (800 pulse/rotation) |
| Horizontal work load | 40 kg |
| Vertical work load | 9 kg |
| Speed | 24 - 500 mm/s |
| Max. Acceleration/deceleration | 3000 mm/s2 |
| Positioning repeatability | ± 0.02 mm |
| Lost motion | 0.1 max. |
| Pushing force | 80 - 189 N |

Specifications are subject to change without prior notice and any obligation on the part of the manufacturer.



SMC CORPORATION Zuazobidea 14, 01012, Vitoria-Gasteiz, Álava +34 945184100 +34 945184126 www.smc.eu support.marketingeurope@smc.com

# Dimensions

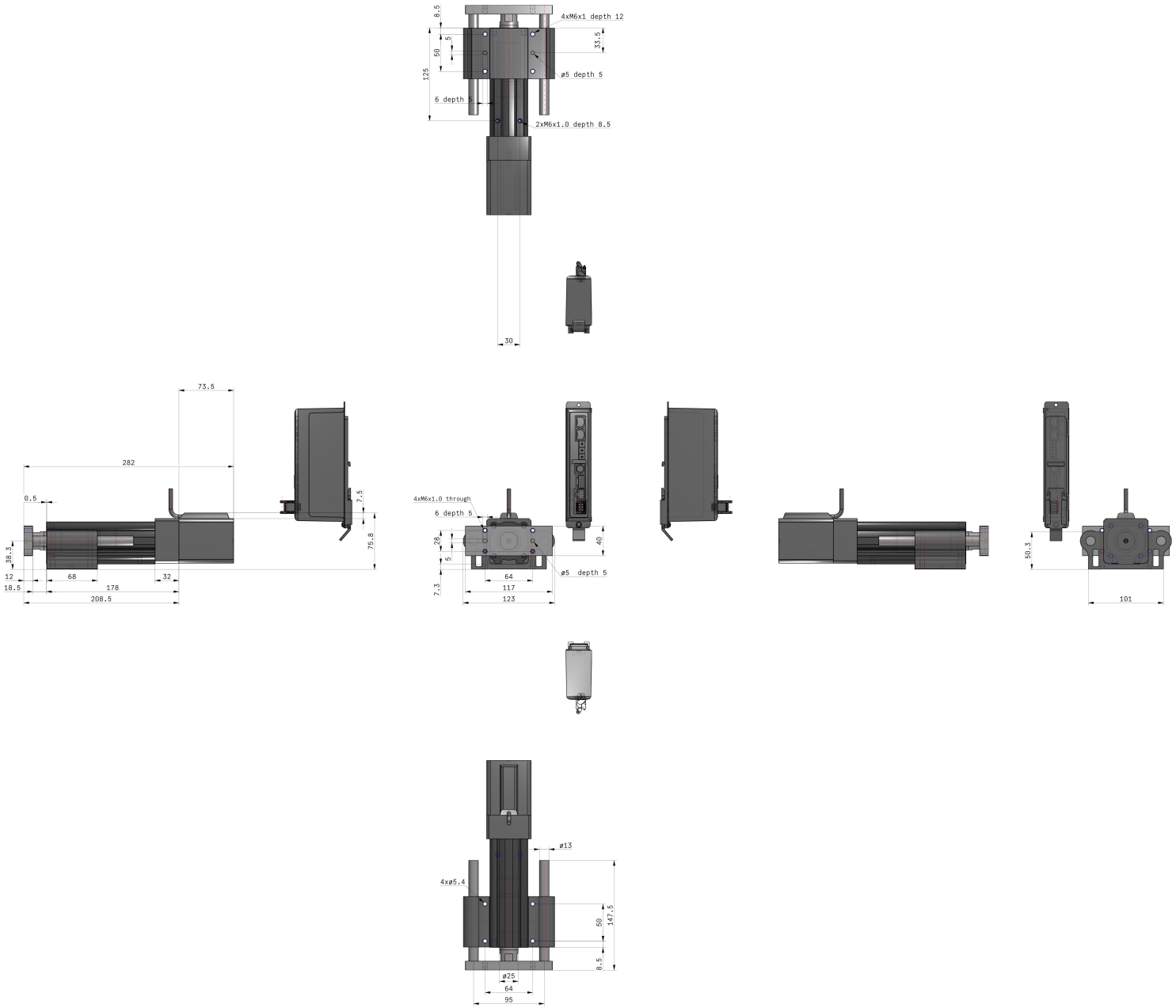


Specifications are subject to change without prior notice and any obligation on the part of the manufacturer.



SMC CORPORATION Zuazobidea 14, 01012, Vitoria-Gasteiz, Álava +34 945184100 +34 945184126 www.smc.eu support.marketingeurope@smc.com

# Constructions

### Motor top mounting type

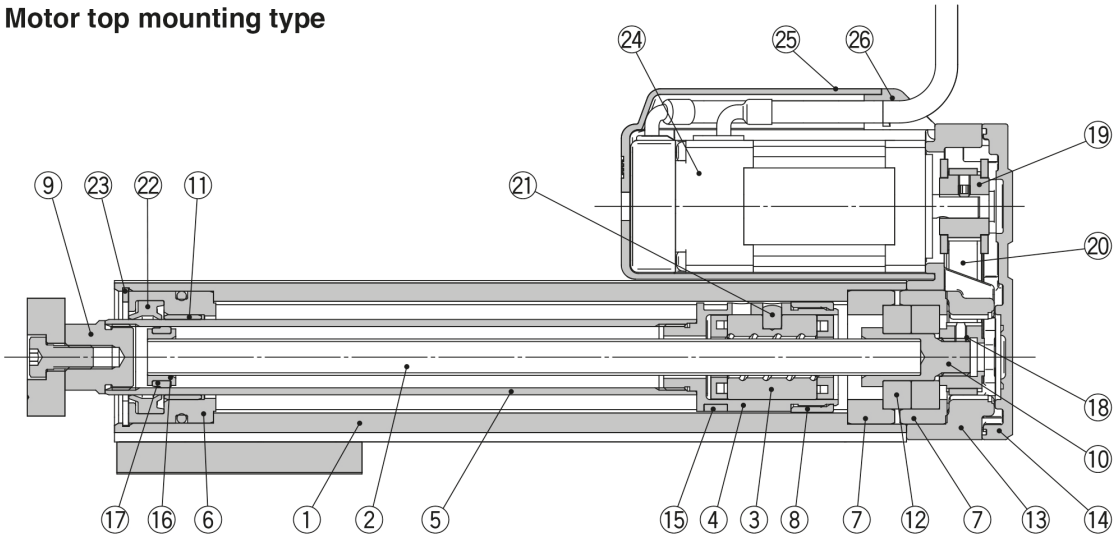


### Motor top mounting type
### With lock/motor cover

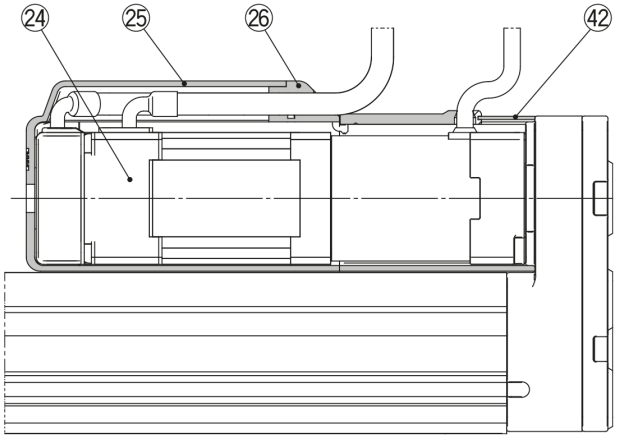


### In-line motor type

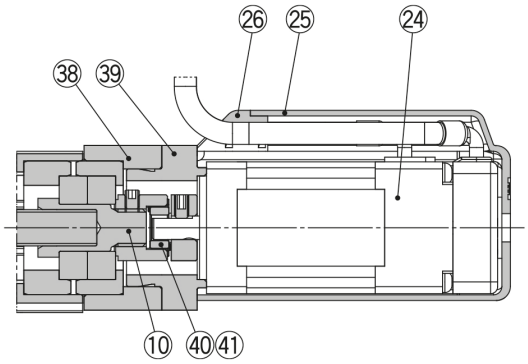


### In-line motor type
### With lock/motor cover

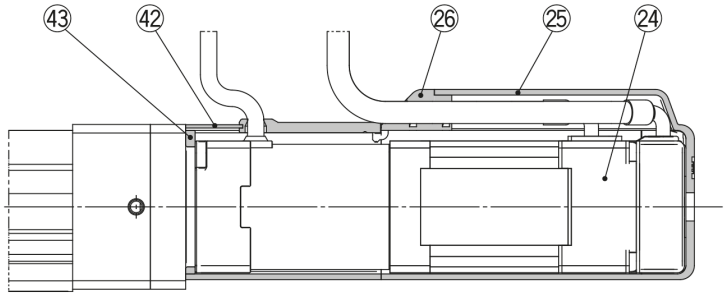


Specifications are subject to change without prior notice and any obligation on the part of the manufacturer.



SMC CORPORATION Zuazobidea 14, 01012, Vitoria-Gasteiz, Álava +34 945184100 +34 945184126 www.smc.eu support.marketingeurope@smc.com

## LEYG□M

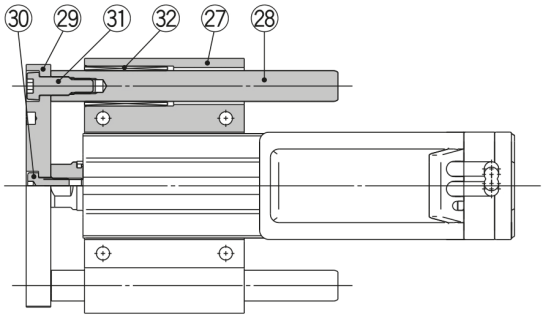


**LEYG$^{16}_{25}_{32}_{40}$M: 50st or less**

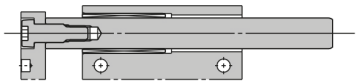

**LEYG$^{16}_{25}_{32}_{40}$M: Over 50st**

**When grease retaining function selected**

**LEYG$^{25}_{32}_{40}$M□□$^{A}_{B}_{C}$-□□F: 50st or less**

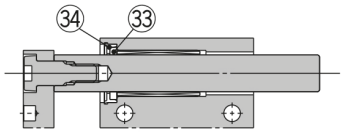


**LEYG$^{25}_{32}_{40}$M□□$^{A}_{B}_{C}$-□□F: Over 50st**

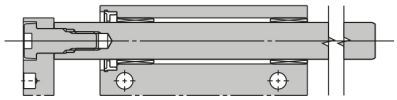

## LEYG□L

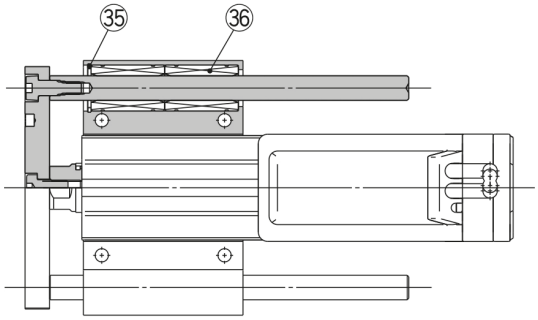


**LEYG16L: 30st or less**
**LEYG$^{25}_{32}_{40}$L: 100st or less**

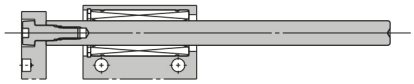

**LEYG16L: Over 30st, 100st or less**

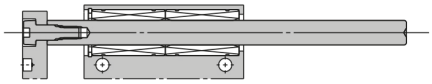

**LEYG$^{16}_{25}_{32}_{40}$L: Over 100st**

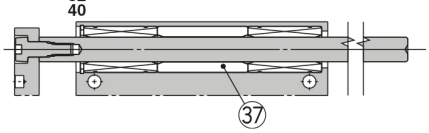


### Component Parts

| No. | Description | Material | Note |
|---|---|---|---|
| 1 | **Body** | Aluminium alloy | Anodised |
| 2 | **Ball screw shaft** | Alloy steel | |
| 3 | **Ball screw nut** | Synthetic resin/Alloy steel | |
| 4 | **Piston** | Aluminium alloy | |
| 5 | **Piston rod** | Stainless steel | Hard chrome plating |
| 6 | **Rod cover** | Aluminium alloy | |
| 7 | **Bearing holder** | Aluminium alloy | |
| 8 | **Rotation stopper** | POM | |
| 9 | **Socket** | Free cutting carbon steel | Nickel plating |
| 10 | **Connected shaft** | Free cutting carbon steel | Nickel plating |
| 11 | **Bushing** | Bearing alloy | |
| 12 | **Bearing** | — | |
| 13 | **Return box** | Aluminium die-cast | Coating |
| 14 | **Return plate** | Aluminium die-cast | Coating |
| 15 | **Magnet** | — | |
| 16 | **Wear ring holder** | Stainless steel | Stroke 101 mm or more |
| 17 | **Wear ring** | POM | Stroke 101 mm or more |
| 18 | **Screw shaft pulley** | Aluminium alloy | |
| 19 | **Motor pulley** | Aluminium alloy | |
| 20 | **Belt** | — | |
| 21 | **Parallel pin** | Stainless steel | |
| 22 | **Seal** | NBR | |
| 23 | **Retaining ring** | Steel for spring | Phosphate coated |
| 24 | **Motor** | — | |
| 25 | **Motor cover** | Synthetic resin | Only “With motor cover” |
| 26 | **Grommet** | Synthetic resin | Only “With motor cover” |
| 27 | **Guide attachment** | Aluminium alloy | Anodised |

| No. | Description | Material | Note |
|---|---|---|---|
| 28 | **Guide rod** | Carbon steel | |
| 29 | **Plate** | Aluminium alloy | Anodised |
| 30 | **Plate mounting cap screw** | Carbon steel | Nickel plating |
| 31 | **Guide cap screw** | Carbon steel | Nickel plating |
| 32 | **Sliding bearing** | Bearing alloy | |
| 33 | **Lube-retainer** | Felt | |
| 34 | **Holder** | Resin | |
| 35 | **Retaining ring** | Steel for spring | Phosphate coated |
| 36 | **Ball bushing** | — | |
| 37 | **Spacer** | Aluminium alloy | Chromated |
| 38 | **Motor block** | Aluminium alloy | Anodised |
| 39 | **Motor adapter** | Aluminium alloy | Anodised/LEY16, 25 only |
| 40 | **Hub** | Aluminium alloy | |
| 41 | **Spider** | NBR | |
| 42 | **Motor cover with lock** | Aluminium alloy | Only “With lock/motor cover” |
| 43 | **Cover support** | Aluminium alloy | Only “With lock/motor cover” |

*Specifications are subject to change without prior notice and any obligation on the part of the manufacturer.*



**SMC CORPORATION** Zuazobidea 14, 01012, Vitoria-Gasteiz, Álava +34 945184100 +34 945184126 www.smc.eu support.marketingeurope@smc.com

# Additional information

| | |
|---|---|
| Catalogue | LEY-F_EU.pdf |
| Declaration of conformity | newDoC_LEY_TF125-487EN.pdf<br>newDoc_LEY_LEYG_stepDC-servoDC_EN-A.pdf |
| Installation manuals | IM_LEYG_StepDC_EN-C.pdf |
| Operation manuals | OM_LEY_LEYG_stepDC_servoDC_EN.pdf |

Specifications are subject to change without prior notice and any obligation on the part of the manufacturer.



SMC CORPORATION Zuazobidea 14, 01012, Vitoria-Gasteiz, Álava +34 945184100 +34 945184126 www.smc.eu support.marketingeurope@smc.com