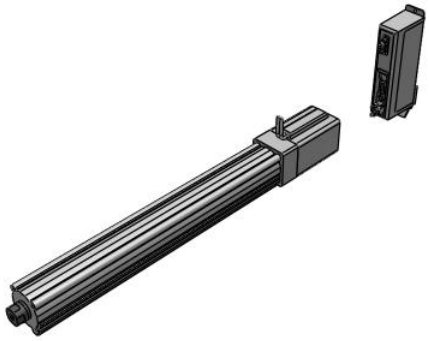

Standard Type - LEY
LEY40DA-300C-R5CL18

Datasheet

General series information

- Body size: 16, 25, 32 and 40 mm
- Stroke: 30 to 500 mm
- Step and servo motor types.

Standard specifications

Size	40
Motor Mounting Position	D (In-line)
Motor	Step Motor (Servo 24 VDC)
Lead Screw	A (Size 16: 10 mm, Size 25: 12 mm, Size 32/40: 16 mm)
Stroke	300 mm
Motor Option	C (w/Motor Cover)
Rod End Thread	Female
Mounting	Both Ends Tapped (Standard)
Actuator Cable	R (Robotic Flexible Cable)
Actuator Cable Length	5 (5m)
Controller	C (JXC, Step Motor Controller)
I/O cabling for LEC controllers	Without Cable
Protocol	L (IO-Link)
Suffix	1 (For Single Axis)
Controller Mounting	8 (DIN Rail)
I/O cabling for JXC Controllers and communication plug connector	None
Maximum ambient temperature	40 °C
Minimum ambient temperature	5 °C
General power supply	24 VDC ±10 %

Specifications are subject to change without prior notice and any obligation on the part of the manufacturer.

SMC CORPORATION Zuazobidea 14, 01012, Vitoria-Gasteiz, Álava +34 945184100 +34 945184126 www.smc.eu support.marketingeurope@smc.com

Approvals	UL/cUL;CE
Pushing speed	30 mm/s or less
Positioning repeatability	± 0.02 mm
Lost motion	0.1 mm or less
Impact/Vibration resistance	50/20 m/s2
Encoder	Incremental A/B phase (800 pulse/rotation)
Horizontal work load	60 kg
Vertical work load	13 kg
Speed	24 - 500 mm/s
Max. Acceleration/deceleration	3000 mm/s2
Pushing force	132 - 283 N

Specifications are subject to change without prior notice and any obligation on the part of the manufacturer.

SMC CORPORATION Zuazobidea 14, 01012, Vitoria-Gasteiz, Álava +34 945184100 +34 945184126 www.smc.eu support.marketingeurope@smc.com

Dimensions

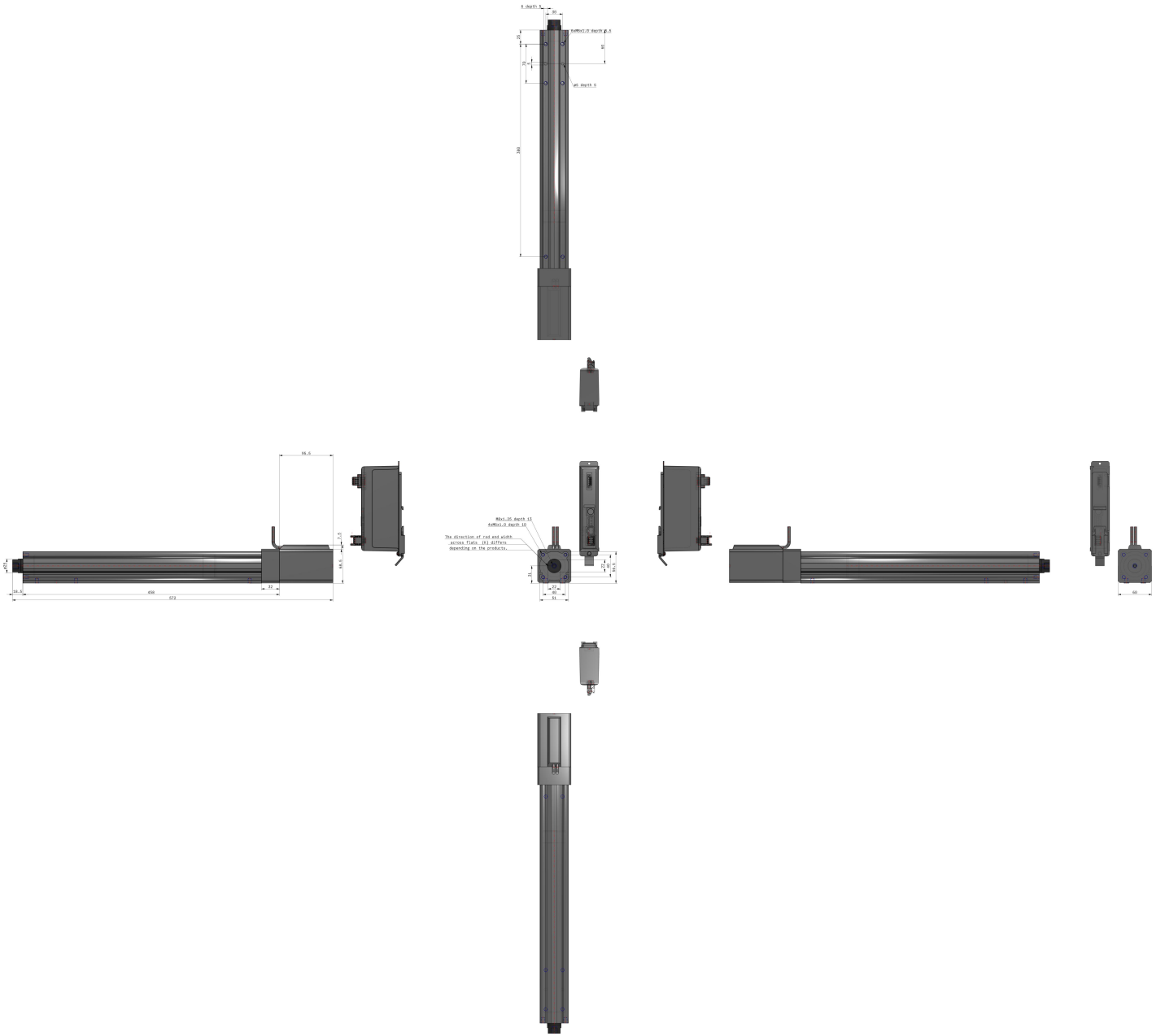

Specifications are subject to change without prior notice and any obligation on the part of the manufacturer.

SMC CORPORATION Zuazobidea 14, 01012, Vitoria-Gasteiz, Álava +34 945184100 +34 945184126 www.smc.eu support.marketingeurope@smc.com

Constructions

Motor top mounting type: LEY 16 / 25 / 32 / 40

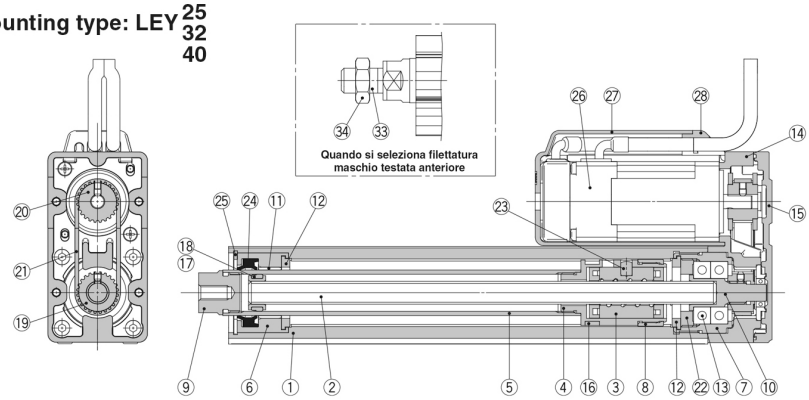

Motor top/parallel type
With lock/motor cover

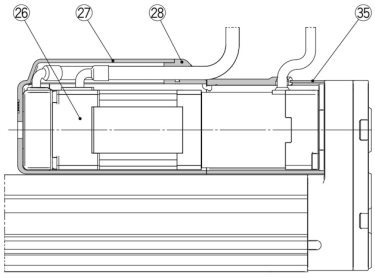

In-line motor type: LEY 16 / 25 / 32 / 40 D

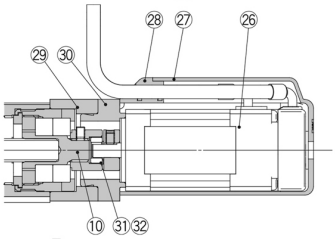

In-line motor type: With lock/motor cover

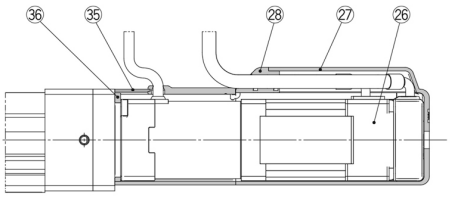

Component Parts

No.	Description	Material	Note
1	**Body**	Aluminium alloy	Anodised
2	**Ball screw (shaft)**	Alloy steel	
3	**Ball screw nut**	Resin/Alloy steel	
4	**Piston**	Aluminium alloy	
5	**Piston rod**	Stainless steel	Hard chrome plating
6	**Rod cover**	Aluminium alloy	
7	**Housing**	Aluminium alloy	
8	**Rotation stopper**	POM	
9	**Socket**	Free cutting carbon steel	Nickel plating
10	**Connected shaft**	Free cutting carbon steel	Nickel plating
11	**Bushing**	Lead bronze cast	
12	**Bumper**	Urethane	
13	**Bearing**	—	
14	**Return box**	Aluminium die-cast	Coating
15	**Return plate**	Aluminium die-cast	Coating
16	**Magnet**	—	
17	**Wear ring holder**	Stainless steel	Stroke 101 mm or more
18	**Wear ring**	POM	Stroke 101 mm or more
19	**Screw shaft pulley**	Aluminium alloy	
20	**Motor pulley**	Aluminium alloy	
21	**Belt**	—	
22	**Bearing stopper**	Aluminium alloy	
23	**Parallel pin**	Stainless steel	
24	**Seal**	NBR	
25	**Retaining ring**	Steel for spring	Phosphate coated

No.	Description	Material	Note
26	**Motor**	—	
27	**Motor cover**	Synthetic resin	Only "With motor cover"
28	**Grommet**	Synthetic resin	Only "With motor cover"
29	**Motor block**	Aluminium alloy	Anodised
30	**Motor adapter**	Aluminium alloy	Anodised/LEY16, 25 only
31	**Hub**	Aluminium alloy	
32	**Spider**	NBR	
33	**Socket (Male thread)**	Free cutting carbon steel	Nickel plating
34	**Nut**	Alloy steel	
35	**Motor cover with lock**	Aluminium alloy	Only "With lock/motor cover"
36	**Cover support**	Aluminium alloy	Only "With lock/motor cover"

Specifications are subject to change without prior notice and any obligation on the part of the manufacturer.

SMC CORPORATION Zuazobidea 14, 01012, Vitoria-Gasteiz, Álava +34 945184100 +34 945184126 www.smc.eu support.marketingeurope@smc.com

Additional information

Catalogue	LEY-F_EU.pdf
Installation manuals	IM_LEY_StepDC_EN-C.pdf
Operation manuals	OM_LEY_LEYG_StepDC_LEC_EN.pdf OM_LEY_LEYG_stepDC_servoDC_EN.pdf

Specifications are subject to change without prior notice and any obligation on the part of the manufacturer.

SMC CORPORATION Zuazobidea 14, 01012, Vitoria-Gasteiz, Álava +34 945184100 +34 945184126 www.smc.eu support.marketingeurope@smc.com