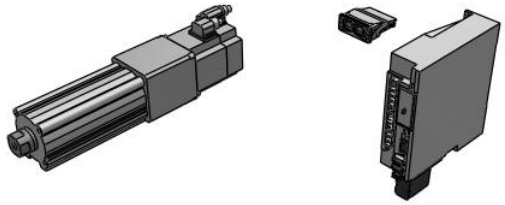

Standard Type, 100/200/400 W - LEY

LEY32DT7A-30-R5ED21

Datasheet

General series information

- Body size: 25, 32 and 63 mm
- Stroke: 30 to 800 mm
- AC Servo Motor, 100/200/400W.

Standard specifications

Accuracy	Basic Type
Size	32
Motor Mounting Position	D (In-line type)
Motor Type	T7 (200W Output, Absolute Encoder, LECSS2)
Lead Screw	A [LEY25: 12mm; LEY32: 16mm; LEY63: 20mm]
Stroke	30 mm
Dust/Drip Proof	(25/32) IP4x; (63) IP5x (Dust Proof Specification)
Motor Option	w/o Lock
Rod End	Rod End Female Thread
Mounting	Both Ends Tapped (Standard)
Actuator Cable type	R (Robotic Flexible Cable)
Cable length	5 (5m)
Controller Type	ED2 (LECSND2-T-E/EtherCAT®, 200 V to 240 V)
I/O Connector	1 (1.5 m)
Maximum ambient temperature	40 °C
Minimum ambient temperature	5 °C
Approvals	CE;UL/cUL
Pushing speed	30 mm/s or less
Lost motion	0.1 mm or less
Impact/Vibration resistance	50/20 m/s2

Specifications are subject to change without prior notice and any obligation on the part of the manufacturer.

SMC CORPORATION Zuazobidea 14, 01012, Vitoria-Gasteiz, Álava +34 945184100 +34 945184126 www.smc.eu support.marketingeurope@smc.com

Horizontal work load	30 kg
Vertical work load	9 kg
Max. Acceleration/deceleration	5000 mm/s2
Positioning repeatability	± 0.02 mm
Max. speed	1200 mm/s
Force (Set value: 15 to 30%)	79 - 157 N

Specifications are subject to change without prior notice and any obligation on the part of the manufacturer.

SMC CORPORATION Zuazobidea 14, 01012, Vitoria-Gasteiz, Álava +34 945184100 +34 945184126 www.smc.eu support.marketingeurope@smc.com

Dimensions

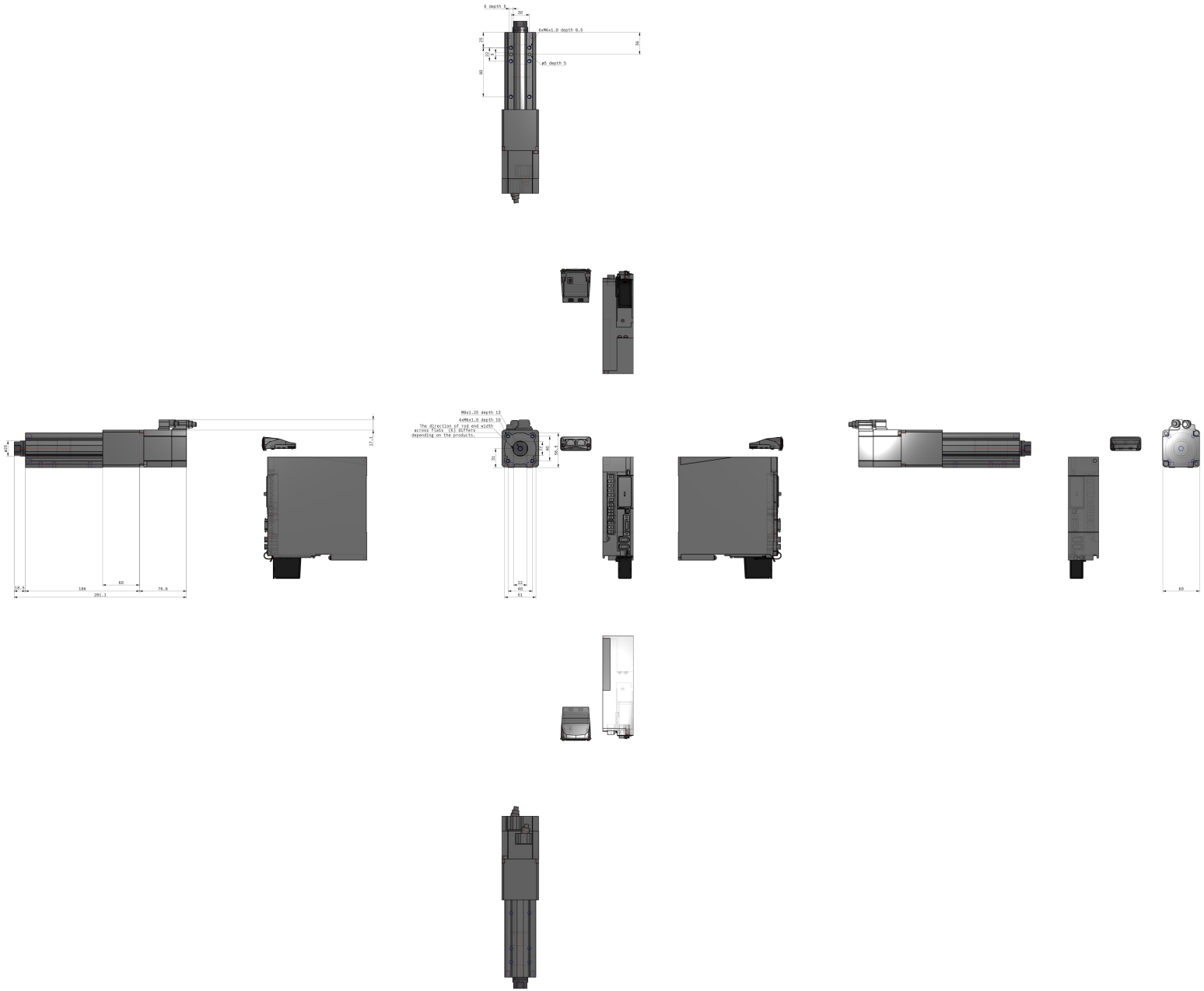

Specifications are subject to change without prior notice and any obligation on the part of the manufacturer.

SMC CORPORATION Zuazobidea 14, 01012, Vitoria-Gasteiz, Álava +34 945184100 +34 945184126 www.smc.eu support.marketingeurope@smc.com

Constructions

Motor top mounting type: LEY$^{25}_{32}$

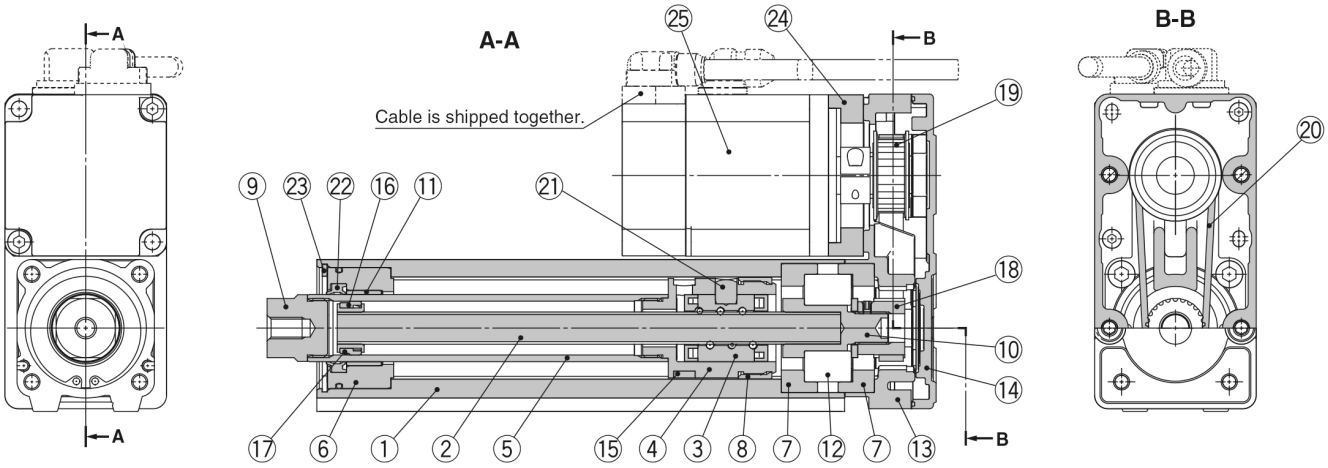

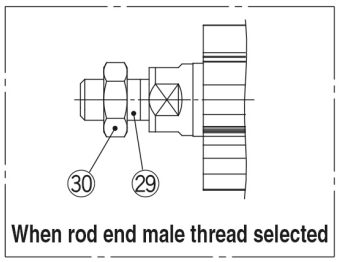

In-line motor type: LEY$^{25}_{32}$D

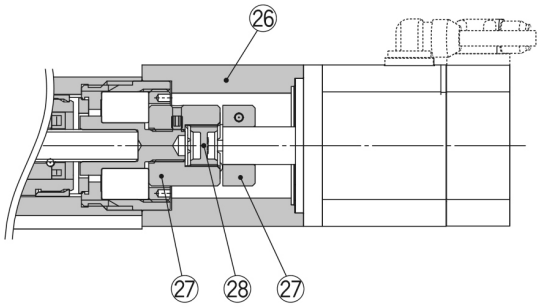

Component Parts

No.	Description	Material	Note
1	**Body**	Aluminium alloy	Anodised
2	**Ball screw shaft**	Alloy steel	
3	**Ball screw nut**	Synthetic resin/Alloy steel	
4	**Piston**	Aluminium alloy	
5	**Piston rod**	Stainless steel	Hard chrome plating
6	**Rod cover**	Aluminium alloy	
7	**Bearing holder**	Aluminium alloy	
8	**Rotation stopper**	POM	
9	**Socket**	Free cutting carbon steel	Nickel plating
10	**Connected shaft**	Free cutting carbon steel	Nickel plating
11	**Bushing**	Bearing alloy	
12	**Bearing**	—	
13	**Return box**	Aluminium die-cast	Coating
14	**Return plate**	Aluminium die-cast	Coating
15	**Magnet**	—	
16	**Wear ring holder**	Stainless steel	Stroke 101 mm or more
17	**Wear ring**	POM	Stroke 101 mm or more
18	**Screw shaft pulley**	Aluminium alloy	
19	**Motor pulley**	Aluminium alloy	
20	**Belt**	—	
21	**Parallel pin**	Stainless steel	
22	**Seal**	NBR	

No.	Description	Material	Note
23	**Retaining ring**	Steel for spring	
24	**Motor adapter**	Aluminium alloy	Coating
25	**Motor**	—	
26	**Motor block**	Aluminium alloy	Coating
27	**Hub**	Aluminium alloy	
28	**Spider**	Urethane	
29	**Socket (Male thread)**	Free cutting carbon steel	Nickel plating
30	**Nut**	Alloy steel	Zinc chromated

Specifications are subject to change without prior notice and any obligation on the part of the manufacturer.

SMC CORPORATION Zuazobidea 14, 01012, Vitoria-Gasteiz, Álava +34 945184100 +34 945184126 www.smc.eu support.marketingeurope@smc.com

Additional information

Catalogue	LEY-F_EU.pdf
Declaration of conformity	newDoC_LEY_LEYG_SERVOAC_LECSS-T_EN-B.pdf newDoC_LEY_LEYG_servoDC_servoAC_LECYx_EN-A.pdf newDoC_LEY_LEYG_servoDC_servoAC_LECSx_EN-A.pdf newDoC_LEY_LEYG_servoAC_LECSA_EN-A.pdf newDoC_LEY_LEYG_servoAC_EN.pdf newDoC_LEY_LEYG_servoAC_LECY_V6-V7-V8_EN-C.pdf newDoC_LEY_LEYG_servoAC_LECS-S2-S3-S4_EN-A.pdf newDoC_LEY_LEYG_servoAC_LECS-S6-S7-S8_EN-B.pdf
Installation manuals	IM_LEY_ServoAC_en.pdf
Operation manuals	OM_LEY_LEYG_OMZ0015EN.pdf

Specifications are subject to change without prior notice and any obligation on the part of the manufacturer.

SMC CORPORATION Zuazobidea 14, 01012, Vitoria-Gasteiz, Álava +34 945184100 +34 945184126 www.smc.eu support.marketingeurope@smc.com