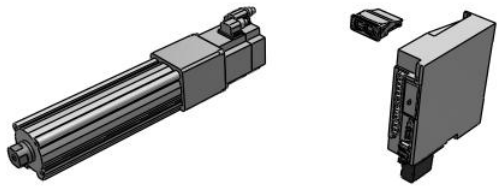

# Standard Type, 100/200/400 W - LEY

## LEY32DT7A-100-R5ED21

Datasheet

## General series information

- Body size: 25, 32 and 63 mm
- Stroke: 30 to 800 mm
- AC Servo Motor, 100/200/400W.

## Standard specifications

| | |
|---|---|
| Accuracy | Basic Type |
| Size | 32 |
| Motor Mounting Position | D (In-line type) |
| Motor Type | T7 (200W Output, Absolute Encoder, LECSS2) |
| Lead Screw | A [LEY25: 12mm; LEY32: 16mm; LEY63: 20mm] |
| Stroke | 100 mm |
| Dust/Drip Proof | (25/32) IP4x; (63) IP5x (Dust Proof Specification) |
| Motor Option | w/o Lock |
| Rod End | Rod End Female Thread |
| Mounting | Both Ends Tapped (Standard) |
| Actuator Cable type | R (Robotic Flexible Cable) |
| Cable length | 5 (5m) |
| Controller Type | ED2 (LECSND2-T-E/EtherCAT®, 200 V to 240 V) |
| I/O Connector | 1 (1.5 m) |
| Maximum ambient temperature | 40 °C |
| Minimum ambient temperature | 5 °C |
| Approvals | CE;UL/cUL |
| Pushing speed | 30 mm/s or less |
| Lost motion | 0.1 mm or less |
| Impact/Vibration resistance | 50/20 m/s2 |

Specifications are subject to change without prior notice and any obligation on the part of the manufacturer.



SMC CORPORATION Zuazobidea 14, 01012, Vitoria-Gasteiz, Álava +34 945184100 +34 945184126 www.smc.eu support.marketingeurope@smc.com

| | |
|---|---|
| Horizontal work load | 30 kg |
| Vertical work load | 9 kg |
| Max. Acceleration/deceleration | 5000 mm/s2 |
| Positioning repeatability | ± 0.02 mm |
| Max. speed | 1200 mm/s |
| Force (Set value: 15 to 30%) | 79 - 157 N |

Specifications are subject to change without prior notice and any obligation on the part of the manufacturer.



SMC CORPORATION Zuazobidea 14, 01012, Vitoria-Gasteiz, Álava +34 945184100 +34 945184126 www.smc.eu support.marketingeurope@smc.com

# Dimensions

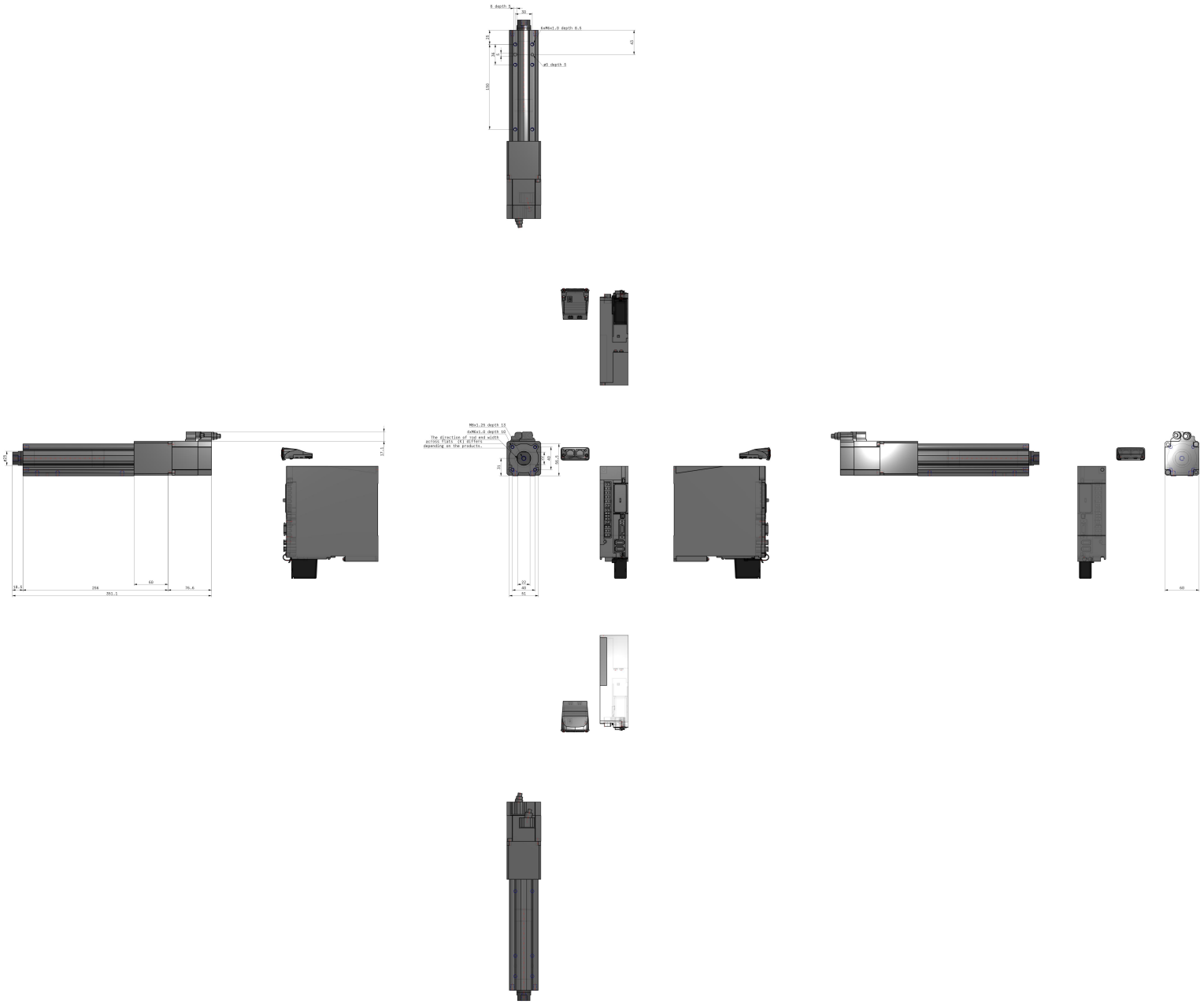

Specifications are subject to change without prior notice and any obligation on the part of the manufacturer.



SMC CORPORATION Zuazobidea 14, 01012, Vitoria-Gasteiz, Álava +34 945184100 +34 945184126 www.smc.eu support.marketingeurope@smc.com

# Constructions

## Motor top mounting type: LEY$^{25}_{32}$

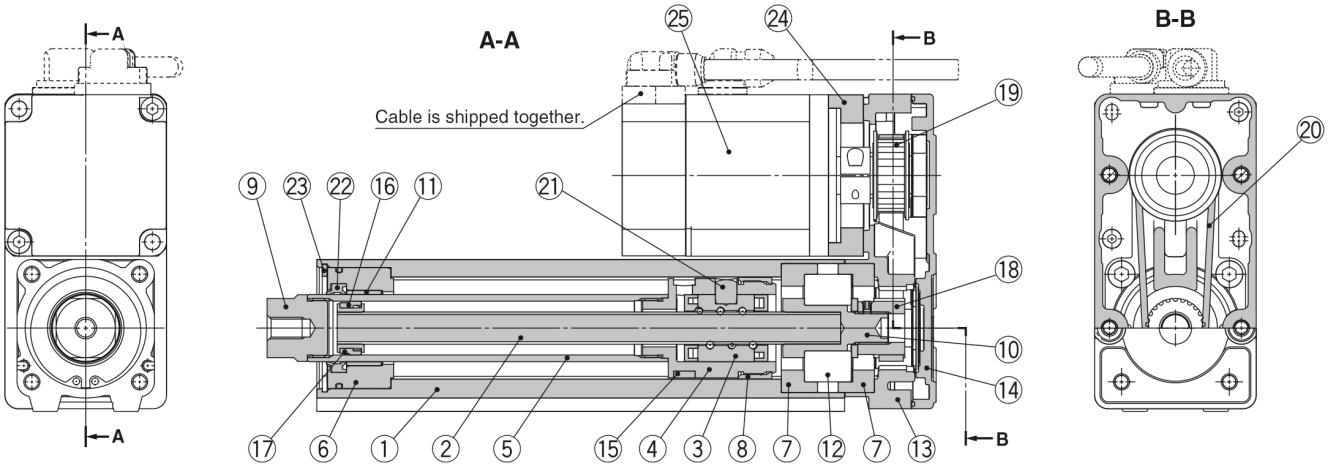


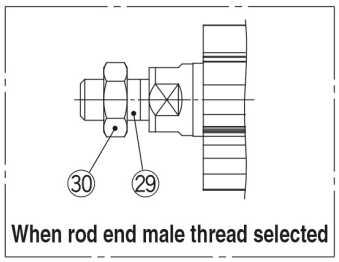


## In-line motor type: LEY$^{25}_{32}$D

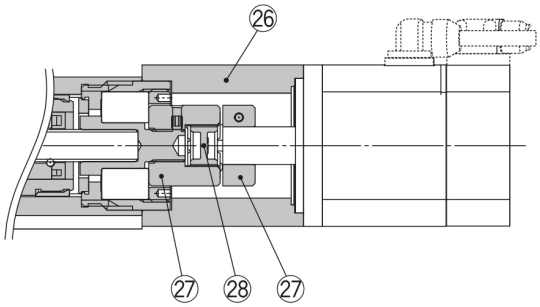


### Component Parts

| No. | Description | Material | Note |
|---|---|---|---|
| 1 | **Body** | Aluminium alloy | Anodised |
| 2 | **Ball screw shaft** | Alloy steel | |
| 3 | **Ball screw nut** | Synthetic resin/Alloy steel | |
| 4 | **Piston** | Aluminium alloy | |
| 5 | **Piston rod** | Stainless steel | Hard chrome plating |
| 6 | **Rod cover** | Aluminium alloy | |
| 7 | **Bearing holder** | Aluminium alloy | |
| 8 | **Rotation stopper** | POM | |
| 9 | **Socket** | Free cutting carbon steel | Nickel plating |
| 10 | **Connected shaft** | Free cutting carbon steel | Nickel plating |
| 11 | **Bushing** | Bearing alloy | |
| 12 | **Bearing** | — | |
| 13 | **Return box** | Aluminium die-cast | Coating |
| 14 | **Return plate** | Aluminium die-cast | Coating |
| 15 | **Magnet** | — | |
| 16 | **Wear ring holder** | Stainless steel | Stroke 101 mm or more |
| 17 | **Wear ring** | POM | Stroke 101 mm or more |
| 18 | **Screw shaft pulley** | Aluminium alloy | |
| 19 | **Motor pulley** | Aluminium alloy | |
| 20 | **Belt** | — | |
| 21 | **Parallel pin** | Stainless steel | |
| 22 | **Seal** | NBR | |

| No. | Description | Material | Note |
|---|---|---|---|
| 23 | **Retaining ring** | Steel for spring | |
| 24 | **Motor adapter** | Aluminium alloy | Coating |
| 25 | **Motor** | — | |
| 26 | **Motor block** | Aluminium alloy | Coating |
| 27 | **Hub** | Aluminium alloy | |
| 28 | **Spider** | Urethane | |
| 29 | **Socket (Male thread)** | Free cutting carbon steel | Nickel plating |
| 30 | **Nut** | Alloy steel | Zinc chromated |

*Specifications are subject to change without prior notice and any obligation on the part of the manufacturer.*



**SMC CORPORATION** Zuazobidea 14, 01012, Vitoria-Gasteiz, Álava +34 945184100 +34 945184126 www.smc.eu support.marketingeurope@smc.com

# Additional information

| | |
|---|---|
| Catalogue | LEY-F_EU.pdf |
| Declaration of conformity | newDoC_LEY_LEYG_SERVOAC_LECSS-T_EN-B.pdf<br>newDoC_LEY_LEYG_servoDC_servoAC_LECYx_EN-A.pdf<br>newDoC_LEY_LEYG_servoDC_servoAC_LECSx_EN-A.pdf<br>newDoC_LEY_LEYG_servoAC_LECSA_EN-A.pdf<br>newDoC_LEY_LEYG_servoAC_EN.pdf<br>newDoC_LEY_LEYG_servoAC_LECY_V6-V7-V8_EN-C.pdf<br>newDoC_LEY_LEYG_servoAC_LECS-S2-S3-S4_EN-A.pdf<br>newDoC_LEY_LEYG_servoAC_LECS-S6-S7-S8_EN-B.pdf |
| Installation manuals | IM_LEY_ServoAC_en.pdf |
| Operation manuals | OM_LEY_LEYG_OMZ0015EN.pdf |

Specifications are subject to change without prior notice and any obligation on the part of the manufacturer.



SMC CORPORATION Zuazobidea 14, 01012, Vitoria-Gasteiz, Álava +34 945184100 +34 945184126 www.smc.eu support.marketingeurope@smc.com