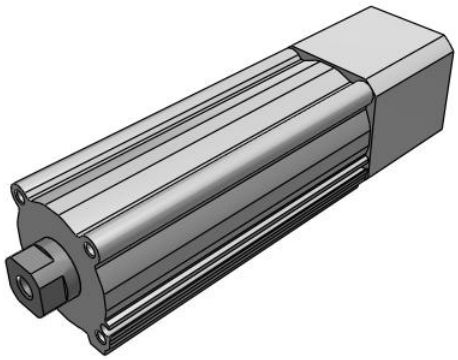

Standard Type - 100/200/400W - LEY

LEY25DNZA-30

Datasheet

General series information

- Body size: 25, 32 and 63 mm.
- Stroke: 30 to 800 mm.
- AC Servo Motor, 100/200/400W.
- Compatible with several motors: OMRON, Siemens AG, Beckhoff automation and more.

Standard specifications

Accuracy	Basic Type
Size	25
Motor Mounting Position	D (In-line)
Motor Type	NZ (Mounting Type Z)
Lead Screw	A [LEY25, 12 mm; LEY32, 16 mm, (20); LEY63, 20 mm]
Stroke	30 mm
Dust/Drip Proof	Size 25, 32: w/o Enclosure; Size 63: IP5x, Dust Proof Specification
Rod End Thread	Rod End Female Thread
Mounting	Ends Tapped/Body Bottom Tapped
Maximum ambient temperature	40 °C
Maximum ambient temperature with magnet	5 °C
Approvals	CE
Subfamily	Electric actuator, guide rod type
Pushing speed	30 mm/s
Positioning repeatability	± 0.02 mm
Lost motion	0.1 mm
Impact/Vibration resistance	50/20 m/s2
Horizontal work load	18 kg

Specifications are subject to change without prior notice and any obligation on the part of the manufacturer.

SMC CORPORATION Zuazobidea 14, 01012, Vitoria-Gasteiz, Álava +34 945184100 +34 945184126 www.smc.eu support.marketingeurope@smc.com

Vertical work load	8 kg
Max. Acceleration/deceleration	5000 mm/s2
Max. speed	900 mm/s
Pushing force	65 - 131 N
Weight	0.800 Kg

Specifications are subject to change without prior notice and any obligation on the part of the manufacturer.

SMC CORPORATION Zuazobidea 14, 01012, Vitoria-Gasteiz, Álava +34 945184100 +34 945184126 www.smc.eu support.marketingeurope@smc.com

Dimensions

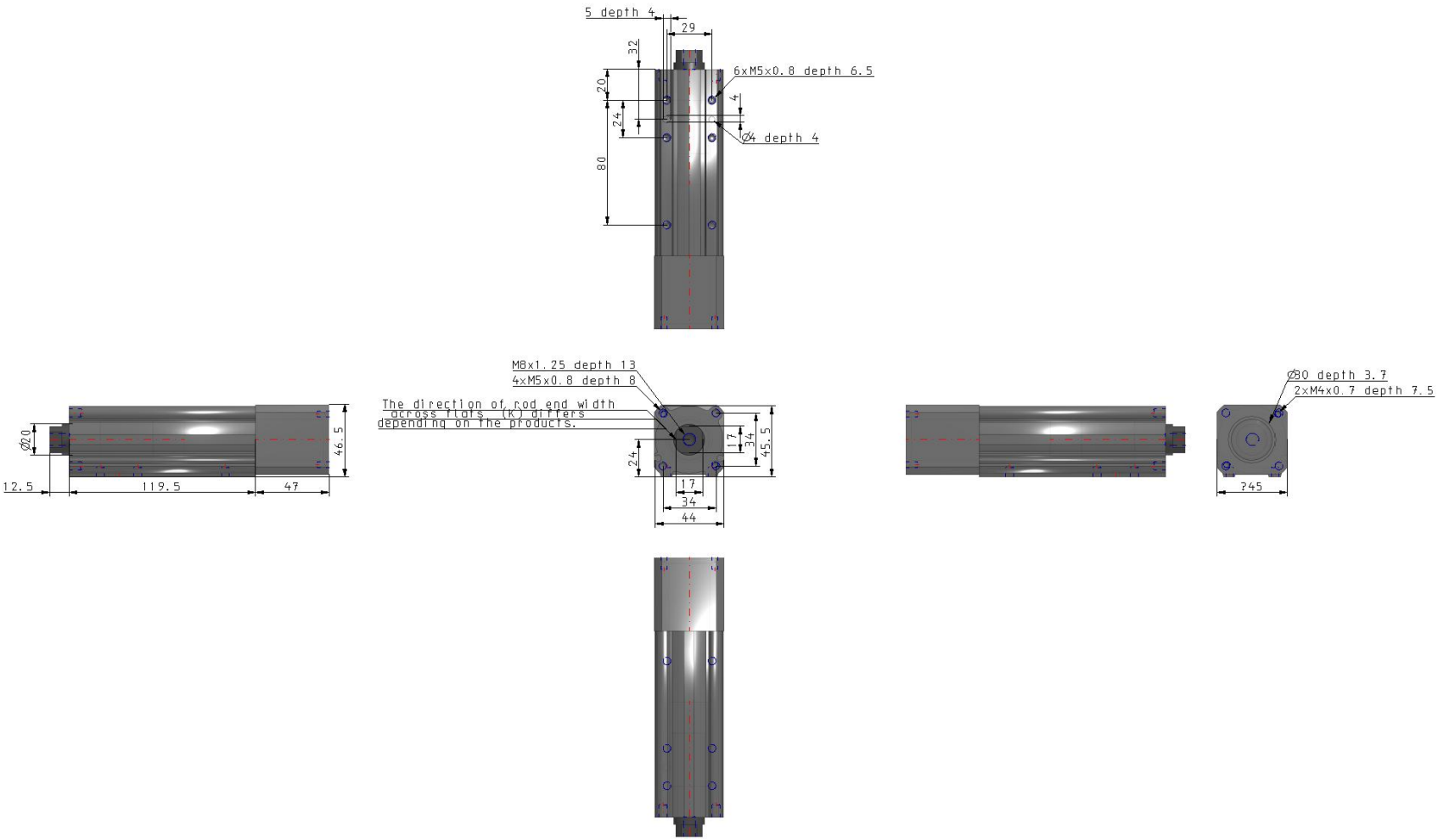

Specifications are subject to change without prior notice and any obligation on the part of the manufacturer.

SMC CORPORATION Zuazobidea 14, 01012, Vitoria-Gasteiz, Álava +34 945184100 +34 945184126 www.smc.eu support.marketingeurope@smc.com

Additional information

Catalogue	LE_motorless-E_EU.pdf

Specifications are subject to change without prior notice and any obligation on the part of the manufacturer.

SMC CORPORATION Zuazobidea 14, 01012, Vitoria-Gasteiz, Álava +34 945184100 +34 945184126 www.smc.eu support.marketingeurope@smc.com