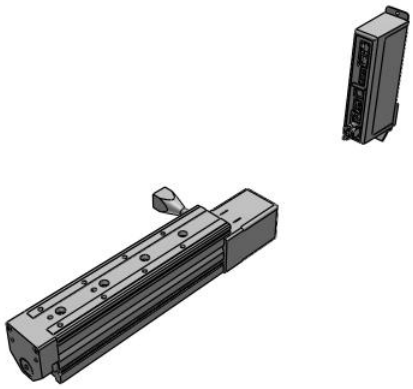

Battery-less Absolute Encoder Type – LESYH

LESYH25DEA-150C-R5C6185

Datasheet

General series information

- Body size: 8, 16 and 25 mm
- Stroke: 50 to 150 mm
- Speed: up to 400 mm/s
- Acceleration: up to 5000 mm/s^2
- Step motor type
- Encoder: battery-less.

Standard specifications

Size	25
Motor Mounting Position	D (In-line)
Lead	A (Size 8: 10 mm, Size 16: 12 mm, Size 25: 16 mm)
Stroke	150 mm
Motor Option	C (w/Motor Cover)
Actuator Cable Length	R5 (5 m)
Controller	C61 [Parallel Input (PNP)]
Mounting	8 (DIN Rail)
Communication Plug Connector, I/O Cable	5 (I/O Cable, 5m)
General power supply	24 VDC ±10%
Lead	16 mm
Pushing speed	20 - 30 mm/s
Positioning repeatability	±0.01 mm
Impact/Vibration resistance	50/20 m/s2
Actuation type	Ball screw
Encoder	Battery-less absolute (4096 pulse/rotation)
Horizontal work load	8 kg

Specifications are subject to change without prior notice and any obligation on the part of the manufacturer.

SMC CORPORATION Zuazobidea 14, 01012, Vitoria-Gasteiz, Álava +34 945184100 +34 945184126 www.smc.eu support.marketingeurope@smc.com

Vertical work load	10 kg
Speed	400 mm/s
Max. Acceleration/deceleration	5000 mm/s2
Operating humidity range	90 % RH or less (No condensation)
Lost motion	0.1 mm or less
Power Consumption	50 W
Operating temperature range	5 - 40 ºC
Pushing force	109 - 218 N
Lock: Holding force	108 N
Guide type	Linear guide (Circulating type)
Motor size	56
Standby power consumption when operating	48 W
Max. instantaneous power consumption	104 W
Lock unit type	Non-magnetizing lock
Lock unit power consumption	5 W
Lock unit rated voltage	24 VDC ±10%

Specifications are subject to change without prior notice and any obligation on the part of the manufacturer.

SMC CORPORATION Zuazobidea 14, 01012, Vitoria-Gasteiz, Álava +34 945184100 +34 945184126 www.smc.eu support.marketingeurope@smc.com

Dimensions

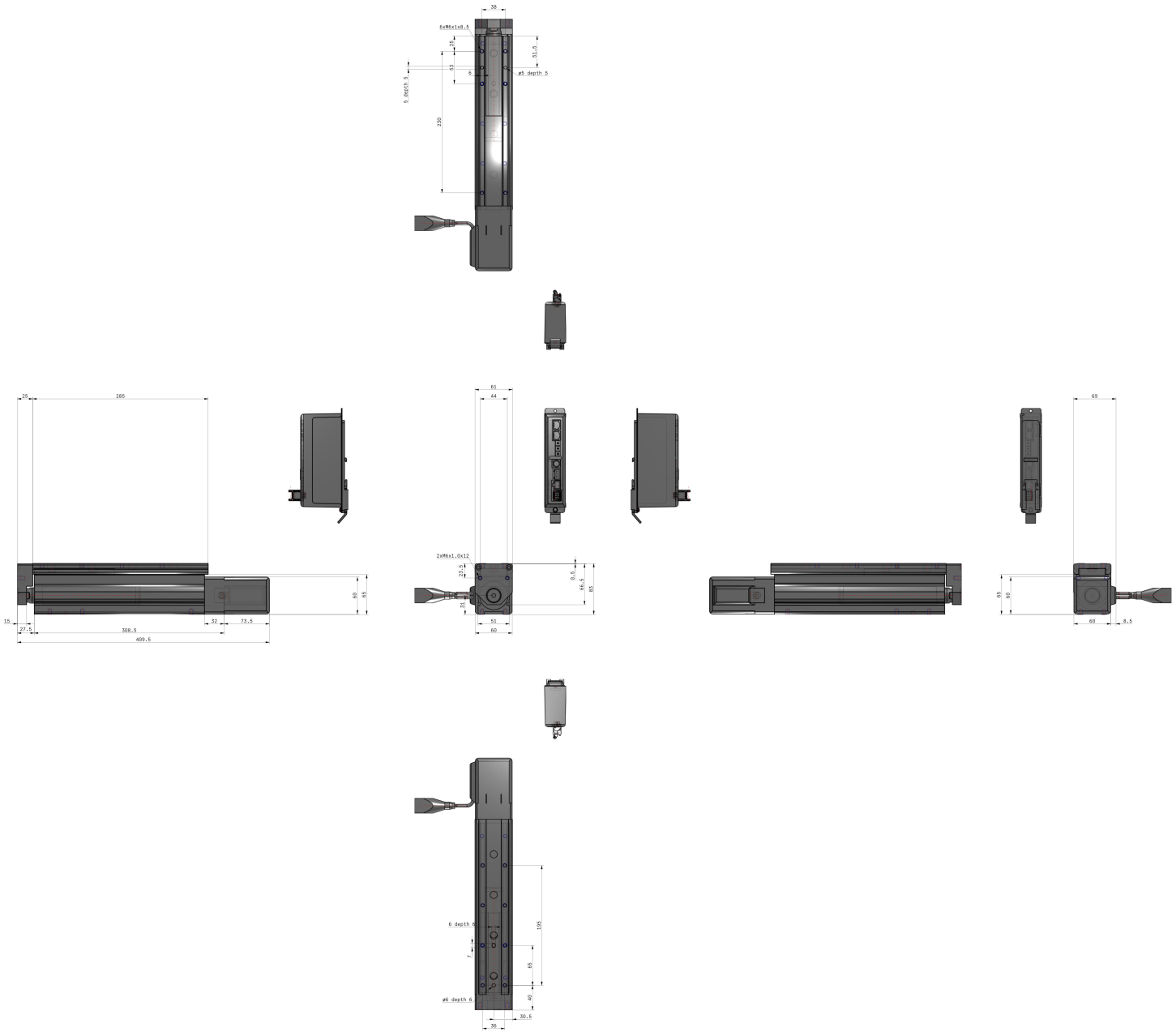

Specifications are subject to change without prior notice and any obligation on the part of the manufacturer.

SMC CORPORATION Zuazobidea 14, 01012, Vitoria-Gasteiz, Álava +34 945184100 +34 945184126 www.smc.eu support.marketingeurope@smc.com

Additional information

Catalogue	LESYH-A_EU.pdf
Declaration of conformity	newDoC_LESxTF1Y281EN-A.pdf newDoc_LES_stepDC-servoDC_EN-A.pdf
Installation manuals	IM_LESYHxE-G_StepDC_EN-A.pdf
Operation manuals	OM_LESH_stepDC_EN.pdf OM_LESHY_stepDC-servoDC_EN

Specifications are subject to change without prior notice and any obligation on the part of the manufacturer.

SMC CORPORATION Zuazobidea 14, 01012, Vitoria-Gasteiz, Álava +34 945184100 +34 945184126 www.smc.eu support.marketingeurope@smc.com