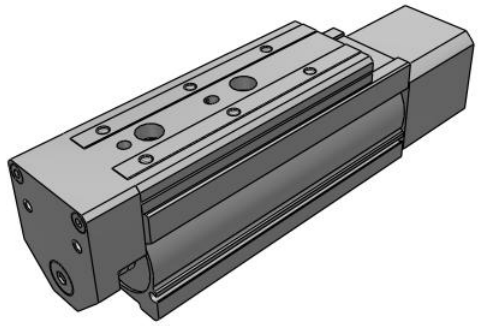

Motorless Type - LESYH
LESYH16DNZA-50

Datasheet

General series information

- Body size: 16 and 25 mm
- Stroke: 50 to 150 mm
- Speed: up to 400 mm/s
- Acceleration: up to 5000 mm/s^2
- Compatible with several motors: OMRON, Siemens AG, Beckhoff Automation, Rockwell Automation and more.

Standard specifications

Size	16
Motor Mounting Position	D (In-line)
Motor Type	NZ (Mounting Type Z)
Lead	A (Size 16: 12 mm, Size 25: 16 mm(D)/20 mm(R/L))
Stroke	50 mm
Pushing speed	35 mm/s or less
Impact/Vibration resistance	50/20 m/s2
Actuation type	Ball screw
Motor type	AC servo motor
Horizontal work load	8 kg
Vertical work load	6 kg
Speed	400 mm/s
Max. Acceleration/deceleration	5000 mm/s2
Operating humidity range	90 % RH or less (No condensation)
Positioning repeatability	±0.01 mm
Lost motion	0.1 mm or less
Operating temperature range	5 - 40 ºC
Pushing force	65 - 131 N

Specifications are subject to change without prior notice and any obligation on the part of the manufacturer.

SMC CORPORATION Zuazobidea 14, 01012, Vitoria-Gasteiz, Álava +34 945184100 +34 945184126 www.smc.eu support.marketingeurope@smc.com

Guide type	Linear guide (Circulating type)
Motor size	40
Other inertia	0.012 kg.cm2 (LESYH16), 0.015 kg.cm2 (LESYH16D)
Friction coefficient	0.05
Mechanical efficiency	0.8
Rated output capacity	100 W
Rated torque	0.32 N.m
Rated rotation	3000 rpm
Weight	1.480 Kg

Specifications are subject to change without prior notice and any obligation on the part of the manufacturer.

SMC CORPORATION Zuazobidea 14, 01012, Vitoria-Gasteiz, Álava +34 945184100 +34 945184126 www.smc.eu support.marketingeurope@smc.com

Dimensions

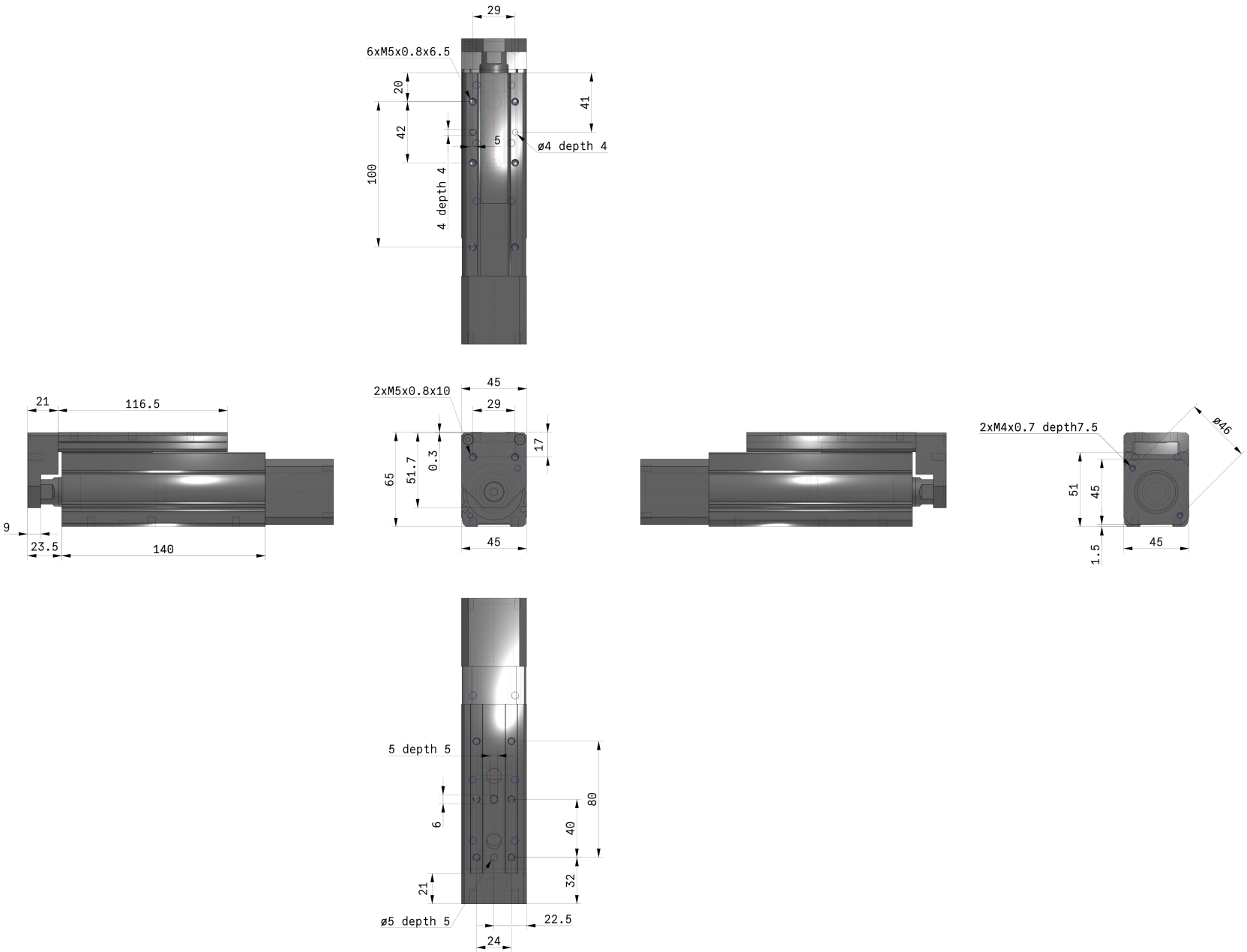

Specifications are subject to change without prior notice and any obligation on the part of the manufacturer.

SMC CORPORATION Zuazobidea 14, 01012, Vitoria-Gasteiz, Álava +34 945184100 +34 945184126 www.smc.eu support.marketingeurope@smc.com

Additional information

Catalogue	LE_motorless-E_EU.pdf
Declaration of conformity	newDoC_LESYH_servoAC_V6_V7_EN.pdf newDoC_LESYH_servoAC_S2_S3_EN.pdf newDoC_LESYH_servoAC_T6_T7_EN.pdf

Specifications are subject to change without prior notice and any obligation on the part of the manufacturer.

SMC CORPORATION Zuazobidea 14, 01012, Vitoria-Gasteiz, Álava +34 945184100 +34 945184126 www.smc.eu support.marketingeurope@smc.com