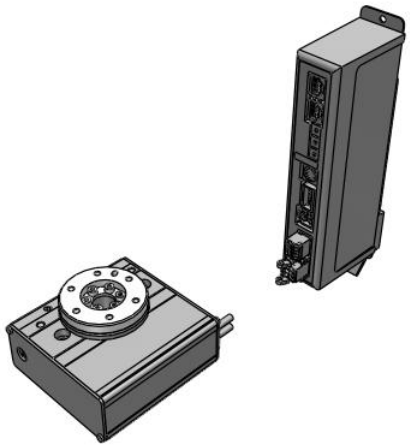

Rotary Table - LER
LER30K-R5CLF8

Datasheet

General series information

- Motor type: Step motor (Servo/24 VDC)
- Size: 10, 30 and 50 mm
- Positioning angle: 360º.

Standard specifications

Table Accuracy	Basic
Size	30
Max. Rotation Torque	K (High Torque, LER10: 0.32; LER30: 1.2; LER50: 10)
Rotation Angle	LER10: 310°; LER30/LER50: 320°
Motor Cable Entry	Basic, Entry on the Right Side
Actuator Cable	R (Robotic Type Cables, Flexible Type)
Actuator Cable Length	5 (5m)
Controller	C (JXC, Step Motor Controller)
I/O cabling for LEC controllers	w/o Cable
Protocol	L (IO-Link)
Suffix	F (with STO Sub-Function)
Controller Option	8 (DIN Rail)
I/O cabling for JXC Controllers & communication plug connector	None
Maximum ambient temperature	40 °C
Minimum ambient temperature	5 °C
General power supply	24 VDC ±10 %
Approvals	CE
F124- Max-operating-frequency	60 c.p.m.
Lead	8°

Specifications are subject to change without prior notice and any obligation on the part of the manufacturer.

SMC CORPORATION Zuazobidea 14, 01012, Vitoria-Gasteiz, Álava +34 945184100 +34 945184126 www.smc.eu support.marketingeurope@smc.com

Max. Rotating torque	1.2 N·m
Max. pushing torque 40 to 50%	0.48 to 0.60 N·m
Max. Moment of inertia	0.027 Kg·m2
Angular speed	20 to 280 °/s
Pushing speed	20 °/s
Max. angular acceleration/deceleration	3000 °/s2
Backlash	±0.2 °
Positioning repeatability	±0.05 °
Lost motion	0.3° or less
Impact/Vibration resistance	150/30 m/s2
Actuation type	Special worm gear + Belt drive
Operating humidity range	90 %RH or less (No condensation)
Motor type	Step motor (Servo/24 VDC)
Encoder	Incremental A/B phase (800 pulse/rotation)

Specifications are subject to change without prior notice and any obligation on the part of the manufacturer.

SMC CORPORATION Zuazobidea 14, 01012, Vitoria-Gasteiz, Álava +34 945184100 +34 945184126 www.smc.eu support.marketingeurope@smc.com

Dimensions

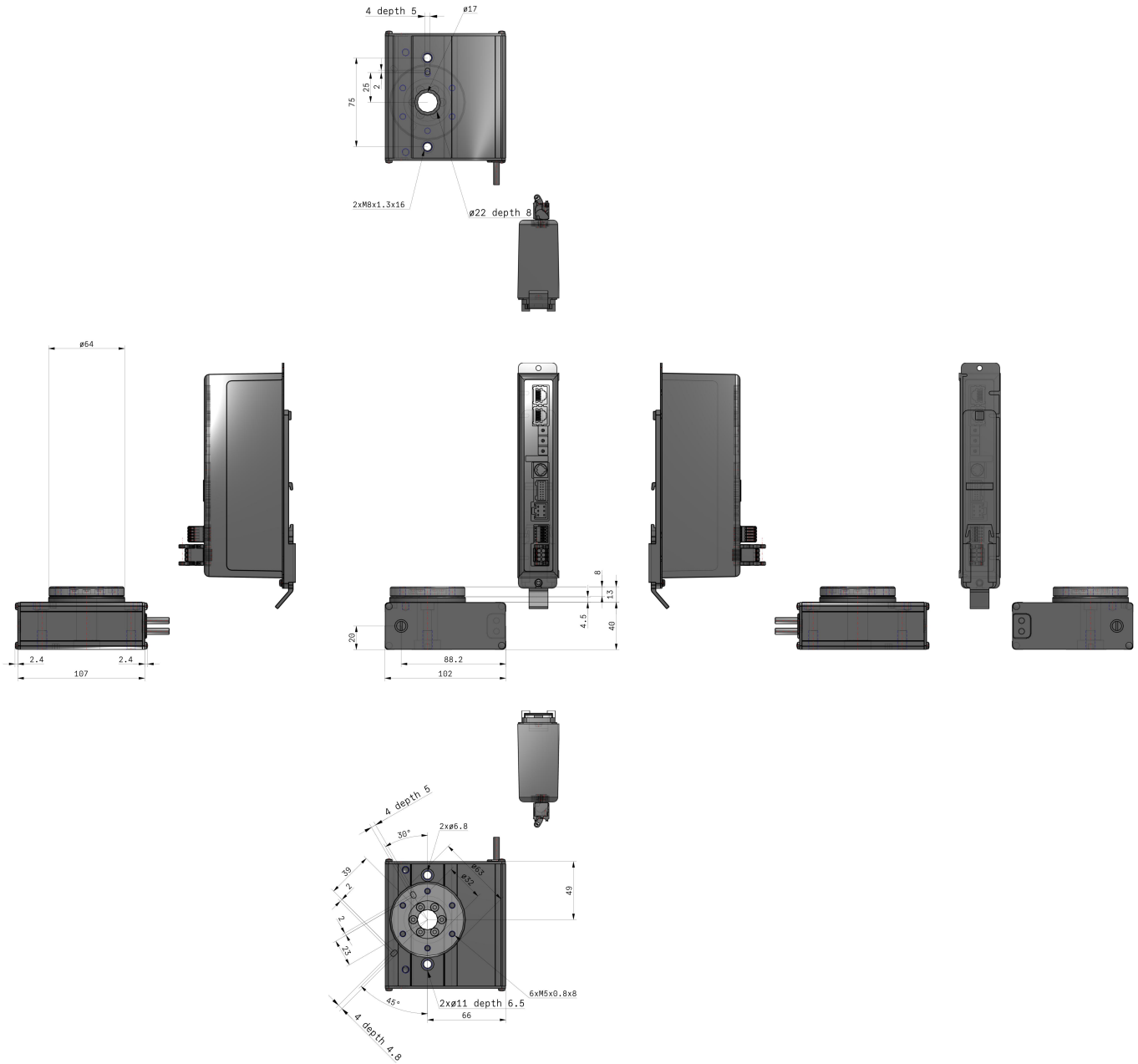

Specifications are subject to change without prior notice and any obligation on the part of the manufacturer.

SMC CORPORATION Zuazobidea 14, 01012, Vitoria-Gasteiz, Álava +34 945184100 +34 945184126 www.smc.eu support.marketingeurope@smc.com

Constructions

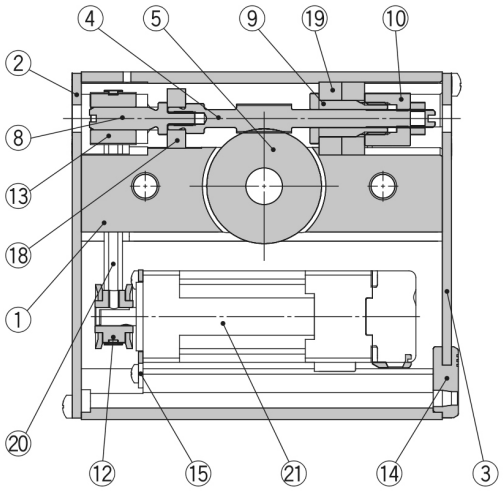

External stopper type

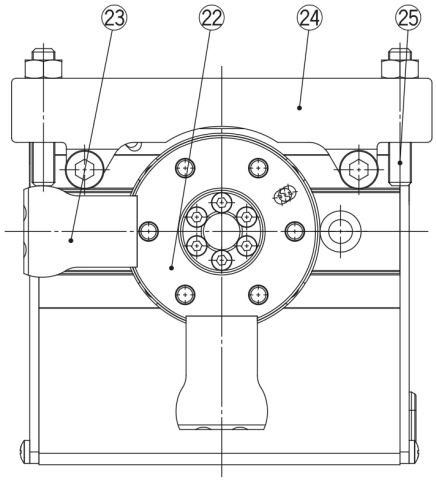

Basic type

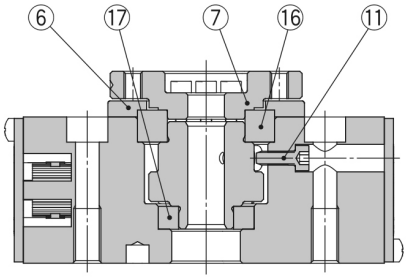

High precision type

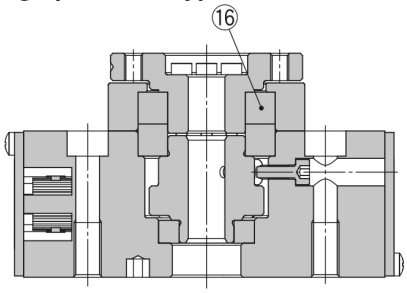

Component Parts

No.	Description		Material	Note
1	**Body**		Aluminium alloy	Anodised
2	**Side plate A**		Aluminium alloy	Anodised
3	**Side plate B**		Aluminium alloy	Anodised
4	**Worm screw**		Stainless steel	Heat treated, specially treated
5	**Worm wheel**		Stainless steel	Heat treated, specially treated
6	**Bearing cover**		Aluminium alloy	Anodised
7	**Table**		Aluminium alloy	
8	**Joint**		Stainless steel	
9	**Bearing holder**		Aluminium alloy	
10	**Bearing retainer**		Aluminium alloy	
11	**Home position bolt**		Carbon steel	
12	**Pulley A**		Aluminium alloy	
13	**Pulley B**		Aluminium alloy	
14	**Grommet**		NBR	
15	**Motor plate**		Carbon steel	
16	**Basic type**	Deep groove ball bearing	—	
	High precision type	Special ball bearing		
17	**Deep groove ball bearing**		—	
18	**Deep groove ball bearing**		—	
19	**Deep groove ball bearing**		—	
20	**Belt**		—	
21	**Step motor (Servo/24 VDC)**		—	

Component Parts

No.	Description	Material	Note
22	**Table**	Aluminium alloy	Anodised
23	**Arm**	Carbon steel	Heat treated, electroless nickel treated
24	**Holder**	Aluminium alloy	Anodised
25	**Adjuster bolt**	Carbon steel	Heat treated, chromate treated

Specifications are subject to change without prior notice and any obligation on the part of the manufacturer.

SMC CORPORATION Zuazobidea 14, 01012, Vitoria-Gasteiz, Álava +34 945184100 +34 945184126 www.smc.eu support.marketingeurope@smc.com

Additional information

Catalogue	LER-Ccccc_EU.pdf
Declaration of conformity	newDoC_LER_StepDC_EN.pdf newDoC_LER_StepDC_EN-A.pdf
Installation manuals	IM_LER_StepDC_EN.pdf
Operation manuals	OM_LER_stepDC_EN.pdf

Specifications are subject to change without prior notice and any obligation on the part of the manufacturer.

SMC CORPORATION Zuazobidea 14, 01012, Vitoria-Gasteiz, Álava +34 945184100 +34 945184126 www.smc.eu support.marketingeurope@smc.com