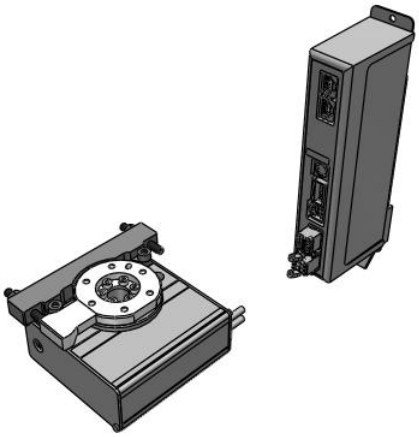

# Rotary Table - LER
## LER30K-2-R5CPF8

Datasheet

## General series information

- Motor type: Step motor (Servo/24 VDC)
- Size: 10, 30 and 50 mm
- Positioning angle: 360º.

## Standard specifications

| | |
|---|---|
| Table Accuracy | Basic Type |
| Size | 30 |
| Max. Rotation Torque | K (High Torque, LER10: 0.32; LER30: 1.2; LER50: 10) |
| Rotation Angle | 2 (180°) |
| Motor Cable Entry | Basic, Entry on the Right Side |
| Actuator Cable | R (Robotic Type Cables, Flexible Type) |
| Actuator Cable Length | 5 (5m) |
| Controller | C (JXC, Step Motor Controller) |
| I/O cabling for LEC controllers | w/o Cable |
| Protocol | P (PROFINET) |
| Suffix | F (With STO Sub-Function) |
| Controller Mounting | 8 (DIN Rail) |
| I/O cabling for JXC Controllers and communication plug connector | None |
| Maximum ambient temperature | 40 °C |
| Minimum ambient temperature | 5 °C |
| General power supply | 24 VDC ±10 % |
| Approvals | CE |
| F124- Max-operating-frequency | 60 c.p.m. |
| Lead | 8° |

Specifications are subject to change without prior notice and any obligation on the part of the manufacturer.



SMC CORPORATION Zuazobidea 14, 01012, Vitoria-Gasteiz, Álava +34 945184100 +34 945184126 www.smc.eu support.marketingeurope@smc.com

| | |
|---|---|
| Max. Rotating torque | 1.2 N·m |
| Max. pushing torque 40 to 50% | 0.48 to 0.60 N·m |
| Max. Moment of inertia | 0.027 Kg·m2 |
| Angular speed | 20 to 280 °/s |
| Pushing speed | 20 °/s |
| Max. angular acceleration/deceleration | 3000 °/s2 |
| Backlash | ±0.2 ° |
| Positioning repeatability | ±0.05 ° |
| Lost motion | 0.3° or less |
| Impact/Vibration resistance | 150/30 m/s2 |
| Actuation type | Special worm gear + Belt drive |
| Operating humidity range | 90 %RH or less (No condensation) |
| Motor type | Step motor (Servo/24 VDC) |
| Encoder | Incremental A/B phase (800 pulse/rotation) |

Specifications are subject to change without prior notice and any obligation on the part of the manufacturer.



SMC CORPORATION Zuazobidea 14, 01012, Vitoria-Gasteiz, Álava +34 945184100 +34 945184126 www.smc.eu support.marketingeurope@smc.com

# Dimensions

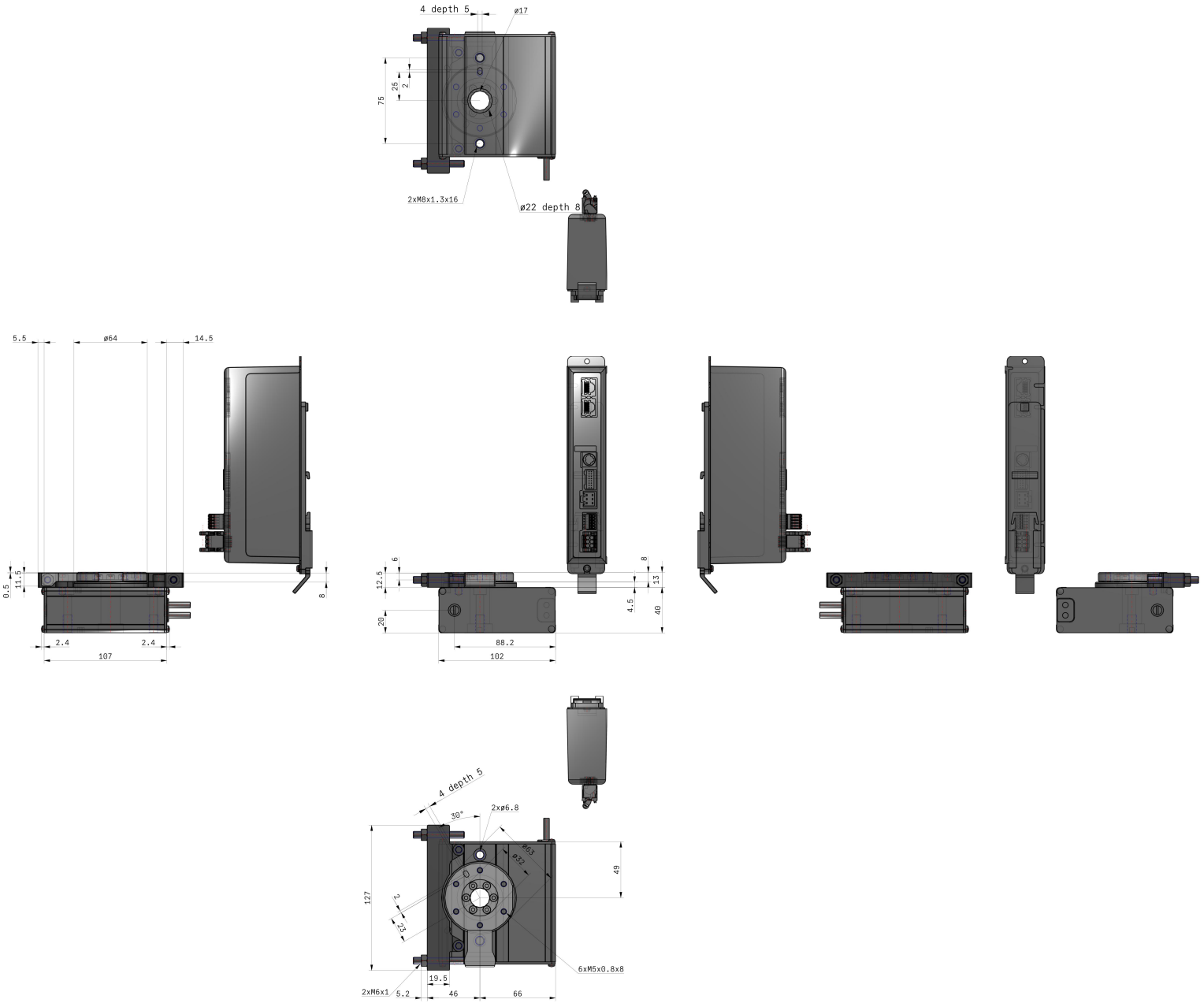


Specifications are subject to change without prior notice and any obligation on the part of the manufacturer.



SMC CORPORATION Zuazobidea 14, 01012, Vitoria-Gasteiz, Álava +34 945184100 +34 945184126 www.smc.eu support.marketingeurope@smc.com

# Constructions

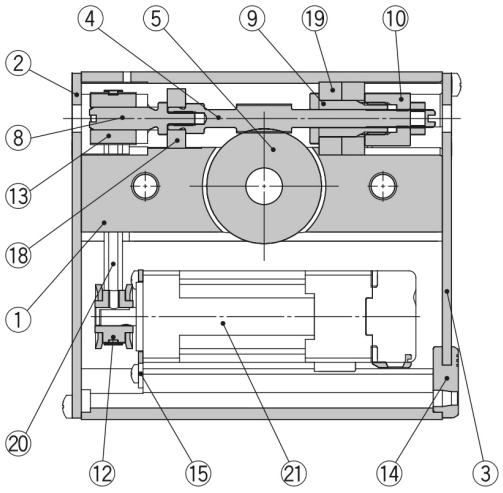


## External stopper type

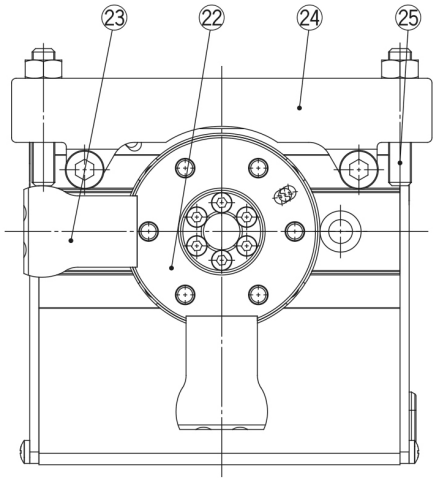


## Basic type

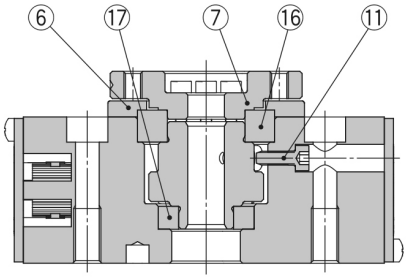


## High precision type

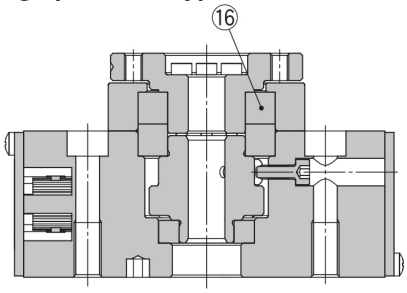


### Component Parts

| No. | Description | Material | Note |
|---|---|---|---|
| 1 | **Body** | Aluminium alloy | Anodised |
| 2 | **Side plate A** | Aluminium alloy | Anodised |
| 3 | **Side plate B** | Aluminium alloy | Anodised |
| 4 | **Worm screw** | Stainless steel | Heat treated, specially treated |
| 5 | **Worm wheel** | Stainless steel | Heat treated, specially treated |
| 6 | **Bearing cover** | Aluminium alloy | Anodised |
| 7 | **Table** | Aluminium alloy | |
| 8 | **Joint** | Stainless steel | |
| 9 | **Bearing holder** | Aluminium alloy | |
| 10 | **Bearing retainer** | Aluminium alloy | |
| 11 | **Home position bolt** | Carbon steel | |
| 12 | **Pulley A** | Aluminium alloy | |
| 13 | **Pulley B** | Aluminium alloy | |
| 14 | **Grommet** | NBR | |
| 15 | **Motor plate** | Carbon steel | |
| 16 | **Basic type** Deep groove ball bearing | — | |
| | **High precision type** Special ball bearing | | |
| 17 | **Deep groove ball bearing** | — | |
| 18 | **Deep groove ball bearing** | — | |
| 19 | **Deep groove ball bearing** | — | |
| 20 | **Belt** | — | |
| 21 | **Step motor (Servo/24 VDC)** | — | |

### Component Parts

| No. | Description | Material | Note |
|---|---|---|---|
| 22 | **Table** | Aluminium alloy | Anodised |
| 23 | **Arm** | Carbon steel | Heat treated, electroless nickel treated |
| 24 | **Holder** | Aluminium alloy | Anodised |
| 25 | **Adjuster bolt** | Carbon steel | Heat treated, chromate treated |

*Specifications are subject to change without prior notice and any obligation on the part of the manufacturer.*



**SMC CORPORATION** Zuazobidea 14, 01012, Vitoria-Gasteiz, Álava +34 945184100 +34 945184126 www.smc.eu support.marketingeurope@smc.com

# Additional information

| | |
|---|---|
| Catalogue | LER-Ccccc_EU.pdf |
| Declaration of conformity | newDoC_LER_StepDC_EN.pdf<br>newDoC_LER_StepDC_EN-A.pdf |
| Installation manuals | IM_LER_StepDC_EN.pdf |
| Operation manuals | OM_LER_stepDC_EN.pdf |

Specifications are subject to change without prior notice and any obligation on the part of the manufacturer.



SMC CORPORATION Zuazobidea 14, 01012, Vitoria-Gasteiz, Álava +34 945184100 +34 945184126 www.smc.eu support.marketingeurope@smc.com