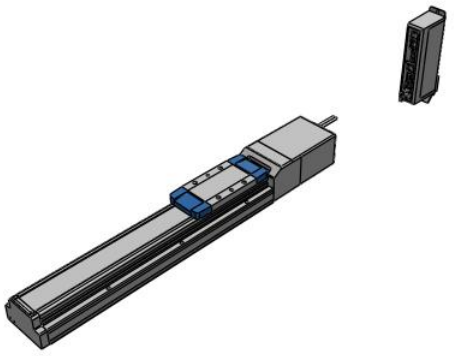

High Rigidity and High Precision - LEKFS

LEKFS40EA-300-R5C6185

Datasheet

General series information

- Body size: 16, 25, 32 and 40 mm
- Stroke: 50 to 1200 mm
- Acceleration: up to 3000 mm/s²
- Speed: up to 1200 mm/s
- Step motor type
- Compatible encoder: battery-less absolute.

Standard specifications

Series	LEKFS
Size	40
Motor Mounting Position	In-line
Motor Type	E (Battery-less absolute, 24 VDC)
Lead	A (Size 16: 10 mm, Size 25: 12 mm, Size 32: 16 mm, Size 40: 20 mm)
Stroke	300
Motor Option	Without Option
Seal Band Stopper	Standard
Actuator Cable Length	R5 (5)
Controller	C61 [Parallel Input (PNP)]
Controller Mounting	8 (DIN Rail Mounting)
Communication Plug Connector, I/O Cable	5 (5)
Maximum ambient temperature	40 ºC
Minimum ambient temperature	5 ºC
General power supply	24 VDC ±10 %
Conform to the European RoHS Directive	Conform

Specifications are subject to change without prior notice and any obligation on the part of the manufacturer.

SMC CORPORATION Zuazobidea 14, 01012, Vitoria-Gasteiz, Álava +34 945184100 +34 945184126 www.smc.eu support.marketingeurope@smc.com

Approvals	CE, UKCA
Impact/Vibration resistance	50/20 m/s²
Actuation type	Ball screw (LEKFS#), Ball screw + Belt (LEKFS#R/L)
Motor type	Step motor (Servo 24 VDC)
Encoder	Battery-less absolute
Power supply	141 W
Horizontal work load	55 Kg
Vertical work load	2 Kg
Speed	20 - 850 mm/s
Max. Acceleration/deceleration	3000 mm/s²
Operating humidity range	90 % RH or less (No condensation)
Positioning repeatability	±0.01 (Lead H: ±0.02) mm
Lost motion	≤ 0.05 mm
Lock: Holding force	113 W
Guide type	Linear guide
Motor size	56.4
Lock unit type	Non-magnetising lock
Lock unit power consumption	5 W
Technical graph 1	8655AA_graph4_en.jpg

Specifications are subject to change without prior notice and any obligation on the part of the manufacturer.

SMC CORPORATION Zuazobidea 14, 01012, Vitoria-Gasteiz, Álava +34 945184100 +34 945184126 www.smc.eu support.marketingeurope@smc.com

Dimensions

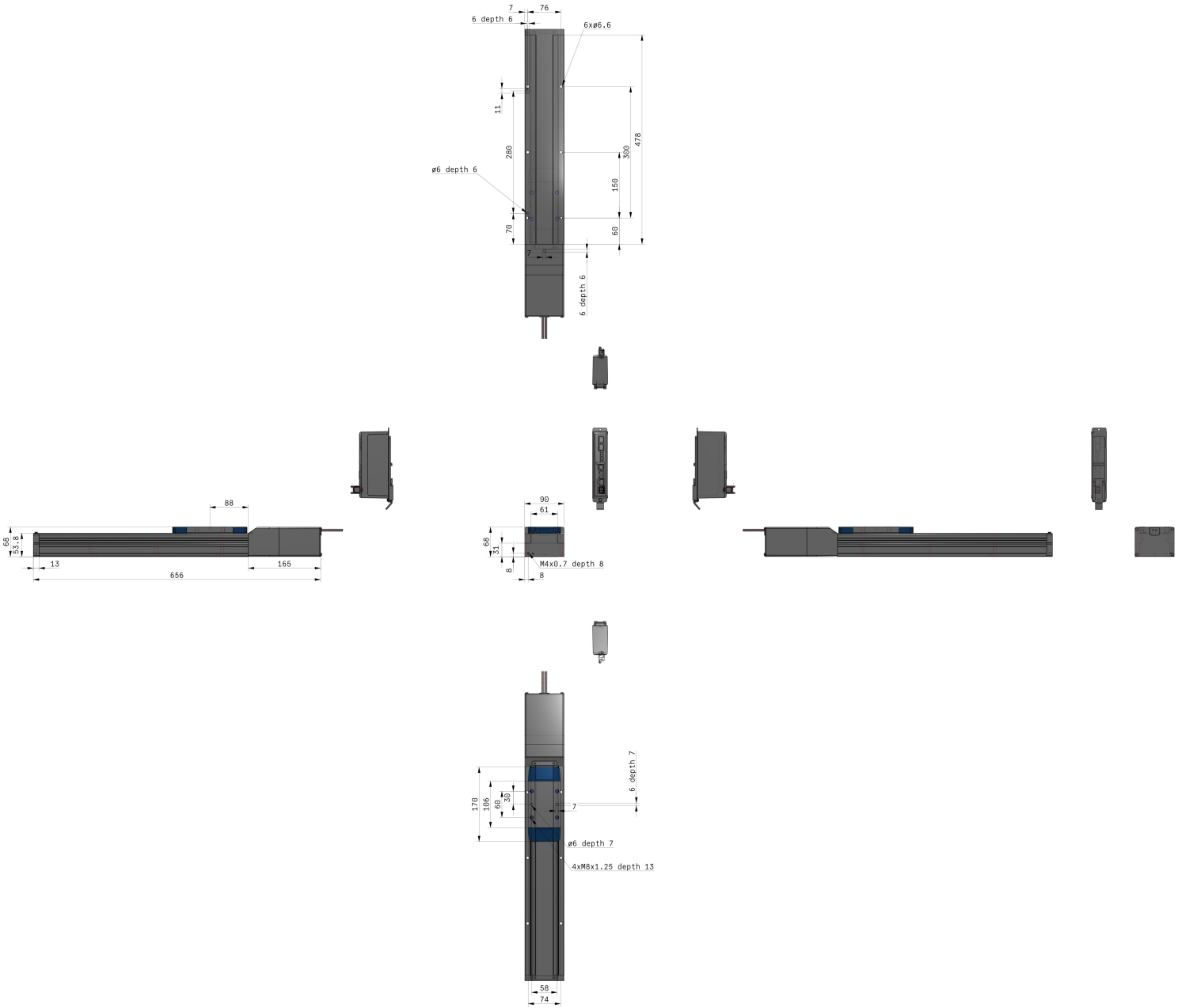

Specifications are subject to change without prior notice and any obligation on the part of the manufacturer.

SMC CORPORATION Zuazobidea 14, 01012, Vitoria-Gasteiz, Álava +34 945184100 +34 945184126 www.smc.eu support.marketingeurope@smc.com

Constructions

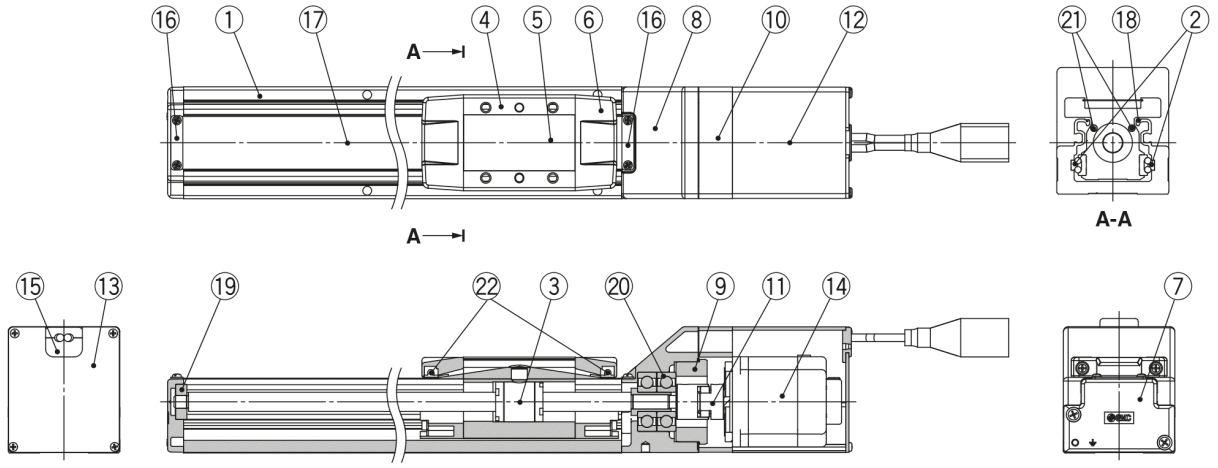

Component Parts

No.	Description	Material	Note
1	**Body**	Aluminium alloy	Anodised
2	**Rail guide**	—	
3	**Ball screw assembly**	—	
4	**Table**	Aluminium alloy	Anodised
5	**Blanking plate**	Aluminium alloy	Anodised
6	**Seal band holder**	Synthetic resin	
7	**Housing A**	Aluminium die-casted	Coating
8	**Housing B**	Aluminium die-casted	Coating
9	**Bearing stopper**	Aluminium alloy	
10	**Motor mount**	Aluminium alloy	Coating
11	**Coupling**	—	
12	**Motor cover**	Aluminium alloy	Anodised
13	**End cover**	Aluminium alloy	Anodised
14	**Motor**	—	

No.	Description	Material	Note
15	**Rubber bushing**	NBR	
16	**Band stopper**	Stainless steel	
17	**Dust seal band**	Stainless steel	
18	**Seal magnet**	—	
19	**Bearing**	—	Stroke 300 mm or more
20	**Bearing**	—	
21	**Magnet**	—	
22	**Roller assembly**	—	Without grease application

Specifications are subject to change without prior notice and any obligation on the part of the manufacturer.

SMC CORPORATION Zuazobidea 14, 01012, Vitoria-Gasteiz, Álava +34 945184100 +34 945184126 www.smc.eu support.marketingeurope@smc.com

Additional information

Catalogue	LEKFS-B_EU.pdf
Declaration of conformity	newDoC_LEKF_TF125-478EN.pdf
Installation manuals	IM_LEKFSxE_TF2Z241EN-B.pdf
Operation manuals	OM_LEKF_stepDC-servoDC_EN-B.pdf

Specifications are subject to change without prior notice and any obligation on the part of the manufacturer.

SMC CORPORATION Zuazobidea 14, 01012, Vitoria-Gasteiz, Álava +34 945184100 +34 945184126 www.smc.eu support.marketingeurope@smc.com