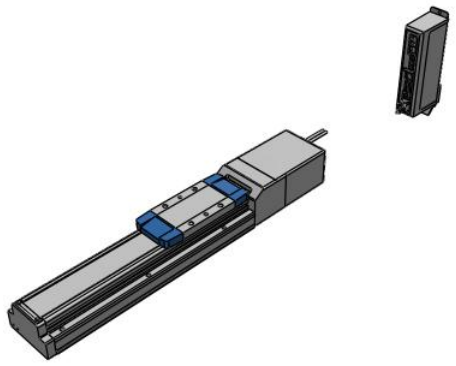

# High Rigidity and High Precision - LEKFS

## LEKFS40EA-200-R5CLF8

Datasheet

## General series information

- Body size: 16, 25, 32 and 40 mm
- Stroke: 50 to 1200 mm
- Acceleration: up to 3000 mm/s²
- Speed: up to 1200 mm/s
- Step motor type
- Compatible encoder: battery-less absolute.

## Standard specifications

| | |
|---|---|
| Series | LEKFS |
| Size | 40 |
| Motor Mounting Position | In-line |
| Motor Type | E (Battery-less absolute, 24 VDC) |
| Lead | A (Size 16: 10 mm, Size 25: 12 mm, Size 32: 16 mm, Size 40: 20 mm) |
| Stroke | 200 |
| Motor Option | Without Option |
| Seal Band Stopper | Standard |
| Actuator Cable Length | R5 (5) |
| Controller | CLF (IO-Link Direct Input w/STO Sub-Function) |
| Controller Mounting | 8 (DIN Rail Mounting) |
| Communication Plug Connector, I/O Cable | None |
| Maximum ambient temperature | 40 ºC |
| Minimum ambient temperature | 5 ºC |
| General power supply | 24 VDC ±10 % |
| Conform to the European RoHS Directive | Conform |

Specifications are subject to change without prior notice and any obligation on the part of the manufacturer.



SMC CORPORATION Zuazobidea 14, 01012, Vitoria-Gasteiz, Álava +34 945184100 +34 945184126 www.smc.eu support.marketingeurope@smc.com

| | |
|---|---|
| Approvals | CE, UKCA |
| Impact/Vibration resistance | 50/20 m/s² |
| Actuation type | Ball screw (LEKFS#), Ball screw + Belt (LEKFS#R/L) |
| Motor type | Step motor (Servo 24 VDC) |
| Encoder | Battery-less absolute |
| Power supply | 141 W |
| Horizontal work load | 55 Kg |
| Vertical work load | 2 Kg |
| Speed | 20 - 850 mm/s |
| Max. Acceleration/deceleration | 3000 mm/s² |
| Operating humidity range | 90 % RH or less (No condensation) |
| Positioning repeatability | ±0.01 (Lead H: ±0.02) mm |
| Lost motion | ≤ 0.05 mm |
| Lock: Holding force | 113 W |
| Guide type | Linear guide |
| Motor size | 56.4 |
| Lock unit type | Non-magnetising lock |
| Lock unit power consumption | 5 W |
| Technical graph 1 | 8655AA_graph4_en.jpg |

*Specifications are subject to change without prior notice and any obligation on the part of the manufacturer.*



**SMC CORPORATION** Zuazobidea 14, 01012, Vitoria-Gasteiz, Álava +34 945184100 +34 945184126 www.smc.eu support.marketingeurope@smc.com

# Dimensions

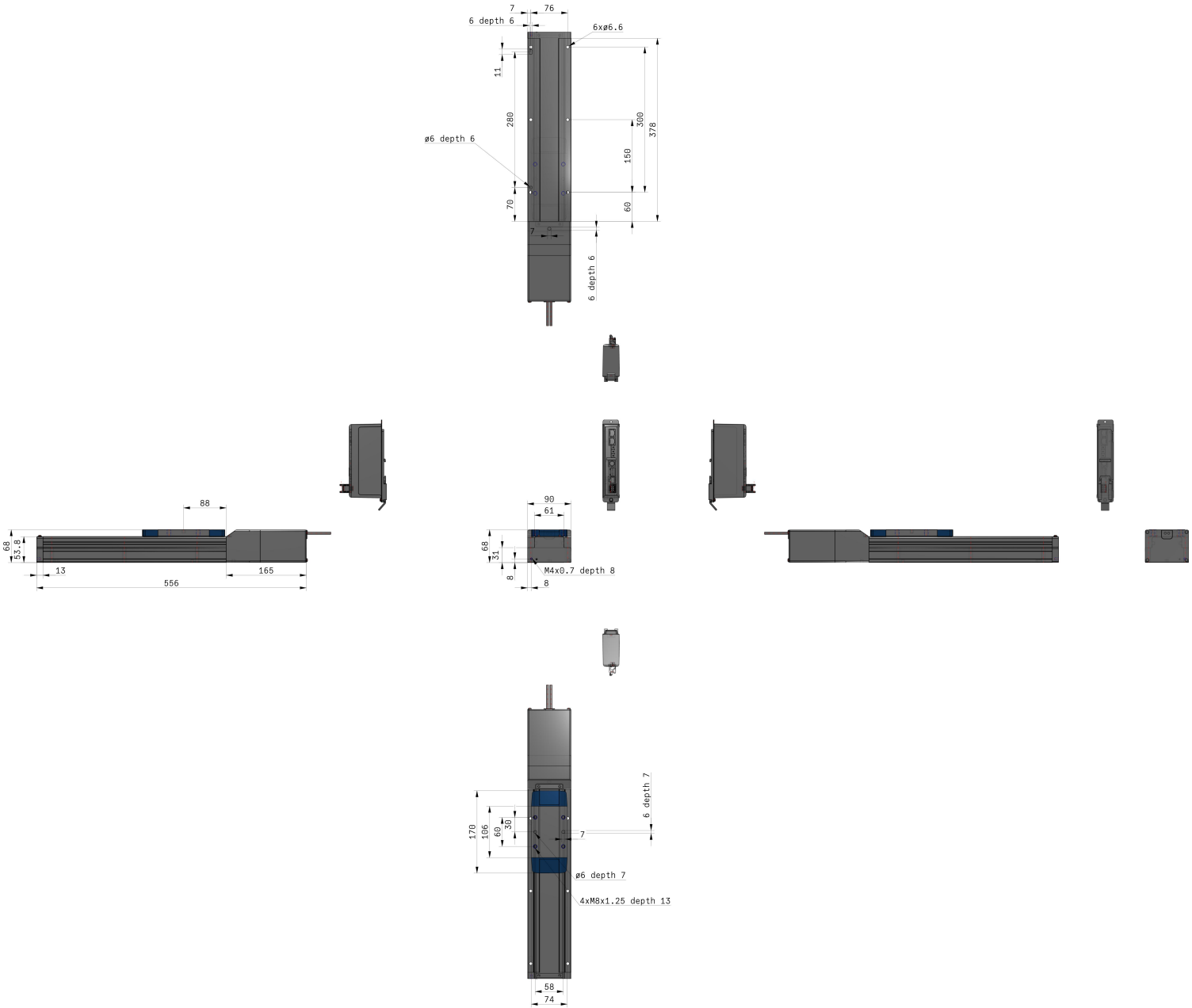


Specifications are subject to change without prior notice and any obligation on the part of the manufacturer.



SMC CORPORATION Zuazobidea 14, 01012, Vitoria-Gasteiz, Álava +34 945184100 +34 945184126 www.smc.eu support.marketingeurope@smc.com

# Constructions

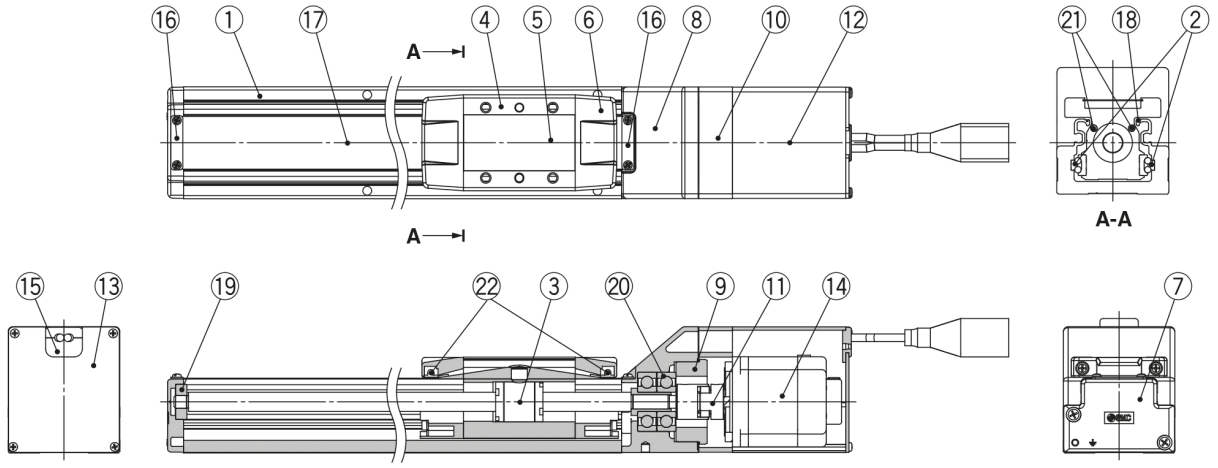


## Component Parts

| No. | Description | Material | Note |
|---|---|---|---|
| 1 | **Body** | Aluminium alloy | Anodised |
| 2 | **Rail guide** | — | |
| 3 | **Ball screw assembly** | — | |
| 4 | **Table** | Aluminium alloy | Anodised |
| 5 | **Blanking plate** | Aluminium alloy | Anodised |
| 6 | **Seal band holder** | Synthetic resin | |
| 7 | **Housing A** | Aluminium die-casted | Coating |
| 8 | **Housing B** | Aluminium die-casted | Coating |
| 9 | **Bearing stopper** | Aluminium alloy | |
| 10 | **Motor mount** | Aluminium alloy | Coating |
| 11 | **Coupling** | — | |
| 12 | **Motor cover** | Aluminium alloy | Anodised |
| 13 | **End cover** | Aluminium alloy | Anodised |
| 14 | **Motor** | — | |

| No. | Description | Material | Note |
|---|---|---|---|
| 15 | **Rubber bushing** | NBR | |
| 16 | **Band stopper** | Stainless steel | |
| 17 | **Dust seal band** | Stainless steel | |
| 18 | **Seal magnet** | — | |
| 19 | **Bearing** | — | Stroke 300 mm or more |
| 20 | **Bearing** | — | |
| 21 | **Magnet** | — | |
| 22 | **Roller assembly** | — | Without grease application |

*Specifications are subject to change without prior notice and any obligation on the part of the manufacturer.*



**SMC CORPORATION** Zuazobidea 14, 01012, Vitoria-Gasteiz, Álava +34 945184100 +34 945184126 www.smc.eu support.marketingeurope@smc.com

## Additional information

| | |
|---|---|
| Catalogue | LEKFS-B_EU.pdf |
| Declaration of conformity | newDoC_LEKF_TF125-478EN.pdf |
| Installation manuals | IM_LEKFSxE_TF2Z241EN-B.pdf |
| Operation manuals | OM_LEKF_stepDC-servoDC_EN-B.pdf |

Specifications are subject to change without prior notice and any obligation on the part of the manufacturer.



SMC CORPORATION Zuazobidea 14, 01012, Vitoria-Gasteiz, Álava +34 945184100 +34 945184126 www.smc.eu support.marketingeurope@smc.com