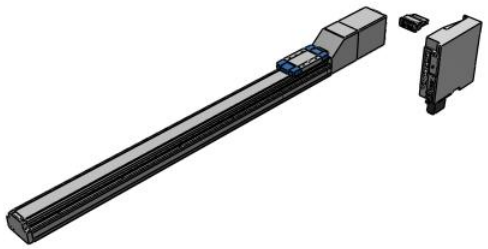

# High Rigidity and High Precision, AC Servo Motor – LEKFS

## LEKFS32T7A-700-R59D21

Datasheet

## General series information

- Body size: 25, 32 and 40 mm
- Stroke: 50 to 1200 mm
- Acceleration: up to 20000 mm/s²
- Speed: up to 1500 mm/s
- AC servo motor
- Compatible encoder: absolute, incremental.

## Standard specifications

| | |
|---|---|
| Size | 32 mm |
| Motor Mounting Position | In-line |
| AC Servo Motor | T7 (200W Output, Absolute Encoder, LECSB2/C2/S2) |
| Lead Screw | A (Size 25: 12 mm, Size 32: 16 mm, Size 40: 20 mm) |
| Stroke | 700 mm |
| Motor Option | w/o Lock |
| Seal Band Stopper | Standard |
| Actuator Cable | R (Robotic Flexible Cable) |
| Actuator Cable Length | 5 (5 m) |
| Driver | 9D2 (LECSND2-T-9/EtherNet/IP™, 200 V to 240 V) |
| I/O Connector | 1 (1.5 m) |
| Maximum ambient temperature | 40 °C |
| Minimum ambient temperature | 5 °C |
| General power supply | 24 VDC ±10 % |
| Conform to the European RoHS Directive | Conform |
| Approvals | CE, UKCA |
| Positioning repeatability | ±0.01 mm |

Specifications are subject to change without prior notice and any obligation on the part of the manufacturer.



SMC CORPORATION Zuazobidea 14, 01012, Vitoria-Gasteiz, Álava +34 945184100 +34 945184126 www.smc.eu support.marketingeurope@smc.com

| | |
|---|---|
| Lost motion | ≤ 0.05 |
| Impact/Vibration resistance | 50/20 m/s² |
| Actuation type | Ball screw (LEKFS#), Ball screw + Belt (LEKFS#R/L) |
| Motor type | AC servo motor (100/200 VAC) |
| Encoder | Motor type S2, S3, S4: Incremental 17-bit encoder (Resolution: 131072 p/rev) Motor type T6, T7, T8: Absolute 22-bit encoder (Resolution: 4194304 p/rev) (For LECSB2-T, LECSS2-T) Motor type T6, T7, T8: Absolute 18-bit encoder (Resolution: 262144 p/rev) (For LECSC2-T) |
| Horizontal work load | 40 Kg |
| Vertical work load | 10 Kg |
| Speed | 620 mm/s |
| Max. Acceleration/deceleration | 20000 mm/s² |
| Operating humidity range | 90 % RH or less (No condensation) |
| Power Consumption | 725 W |
| Lock: Holding force | 197 W |
| Guide type | Linear guide |
| Motor size | 60 |
| Lock unit type | Non-magnetising lock |
| Lock unit power consumption | 7,9 W |
| Technical graph 1 | 8655AK_graph2_en.jpg |

Specifications are subject to change without prior notice and any obligation on the part of the manufacturer.



SMC CORPORATION Zuazobidea 14, 01012, Vitoria-Gasteiz, Álava +34 945184100 +34 945184126 www.smc.eu support.marketingeurope@smc.com

# Dimensions

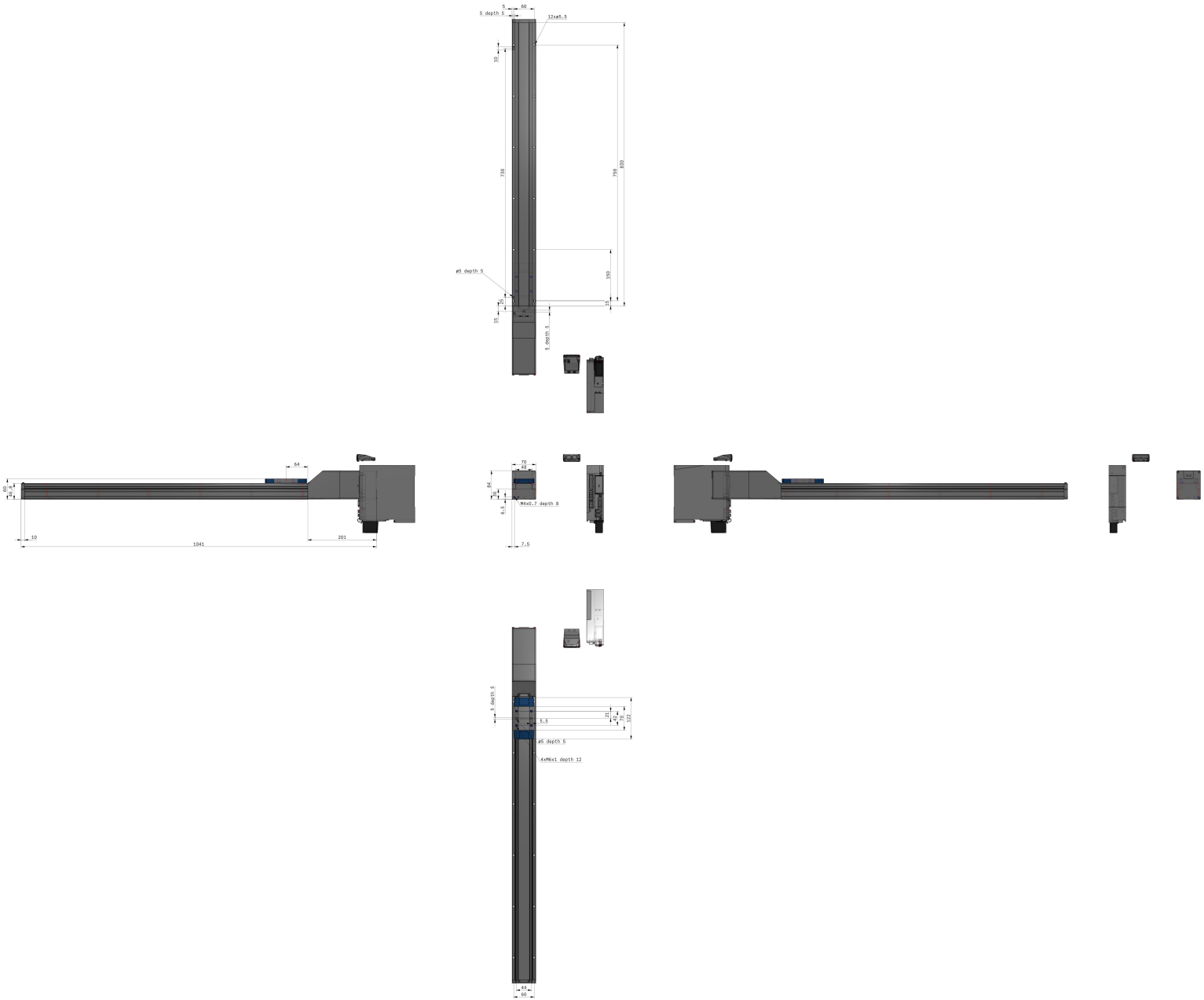


Specifications are subject to change without prior notice and any obligation on the part of the manufacturer.



SMC CORPORATION Zuazobidea 14, 01012, Vitoria-Gasteiz, Álava +34 945184100 +34 945184126 www.smc.eu support.marketingeurope@smc.com

# Constructions

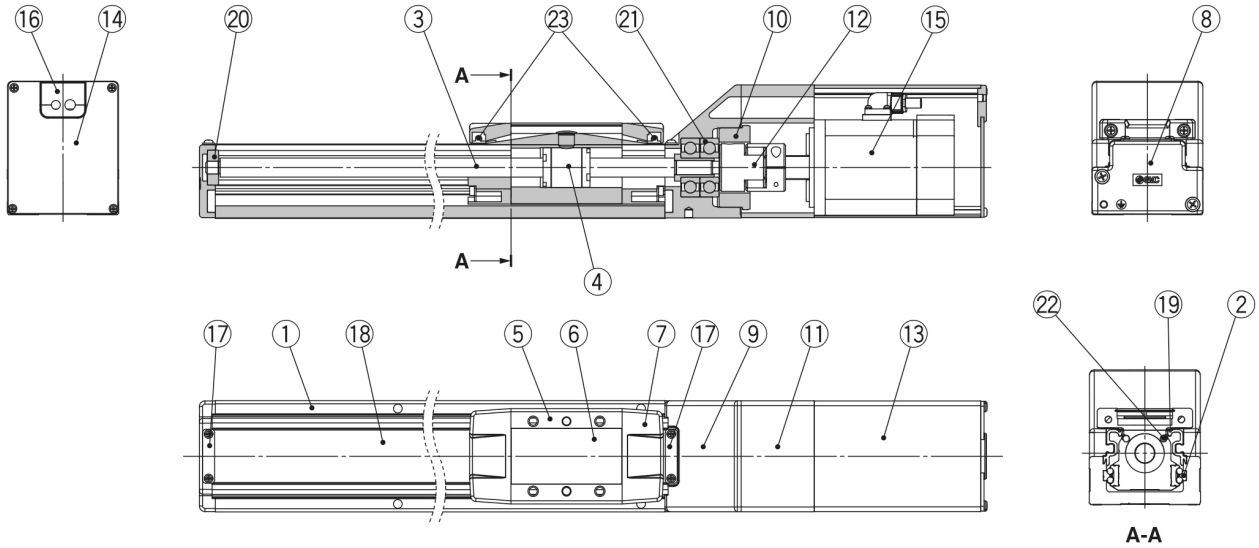


## Component Parts

| No. | Description | Material | Note |
|---|---|---|---|
| 1 | **Body** | Aluminium alloy | Anodised |
| 2 | **Rail guide** | — | |
| 3 | **Ball screw shaft** | — | |
| 4 | **Ball screw nut** | — | |
| 5 | **Table** | Aluminium alloy | Anodised |
| 6 | **Blanking plate** | Aluminium alloy | Anodised |
| 7 | **Seal band holder** | Synthetic resin | |
| 8 | **Housing A** | Aluminium die-casted | Coating |
| 9 | **Housing B** | Aluminium die-casted | Coating |
| 10 | **Bearing stopper** | Aluminium alloy | |
| 11 | **Motor mount** | Aluminium alloy | Coating |
| 12 | **Coupling** | — | |
| 13 | **Motor cover** | Aluminium alloy | Anodised |
| 14 | **End cover** | Aluminium alloy | Anodised |
| 15 | **Motor** | — | |

| No. | Description | Material | Note |
|---|---|---|---|
| 16 | **Rubber bushing** | NBR | |
| 17 | **Band stopper** | Stainless steel | |
| 18 | **Dust seal band** | Stainless steel | |
| 19 | **Seal magnet** | — | |
| 20 | **Bearing** | — | Stroke 300 mm or more |
| 21 | **Bearing** | — | |
| 22 | **Magnet** | — | |
| 23 | **Roller assembly** | — | Without grease application |

*Specifications are subject to change without prior notice and any obligation on the part of the manufacturer.*



**SMC CORPORATION** Zuazobidea 14, 01012, Vitoria-Gasteiz, Álava +34 945184100 +34 945184126 www.smc.eu support.marketingeurope@smc.com

# Additional information

| | |
|---|---|
| Catalogue | LEKFS-B_EU.pdf |
| Declaration of conformity | newDoC_LEKF_TF1Z248EN.pdf<br>newDoC_LEKF_TF1Z246EN-A.pdf<br>newDoC_LEKF_TF125-481EN.pdf |
| Installation manuals | IM_LEKFS_TF2Z583EN.pdf |
| Operation manuals | OM_LEKFS_servoAC_OMZ0035_EN-B.pdf |

Specifications are subject to change without prior notice and any obligation on the part of the manufacturer.



SMC CORPORATION Zuazobidea 14, 01012, Vitoria-Gasteiz, Álava +34 945184100 +34 945184126 www.smc.eu support.marketingeurope@smc.com