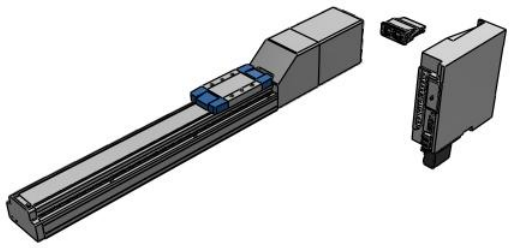

High Rigidity and High Precision, AC Servo Motor – LEKFS

LEKFS32T7A-300-R5PD21

Datasheet

General series information

- Body size: 25, 32 and 40 mm
- Stroke: 50 to 1200 mm
- Acceleration: up to 20000 mm/s²
- Speed: up to 1500 mm/s
- AC servo motor
- Compatible encoder: absolute, incremental.

Standard specifications

Size	32 mm
Motor Mounting Position	In-line
AC Servo Motor	T7 (200W Output, Absolute Encoder, LECSB2/C2/S2)
Lead Screw	A (Size 25: 12 mm, Size 32: 16 mm, Size 40: 20 mm)
Stroke	300 mm
Motor Option	w/o Lock
Seal Band Stopper	Standard
Actuator Cable	R (Robotic Flexible Cable)
Actuator Cable Length	5 (5 m)
Driver	PD2 (LECSND2-T-P/PROFINET®, 200 V to 240 V)
I/O Connector	1 (1.5 m)
Maximum ambient temperature	40 °C
Minimum ambient temperature	5 °C
General power supply	24 VDC ±10 %
Conform to the European RoHS Directive	Conform
Approvals	CE, UKCA
Positioning repeatability	±0.01 mm

Specifications are subject to change without prior notice and any obligation on the part of the manufacturer.

SMC CORPORATION Zuazobidea 14, 01012, Vitoria-Gasteiz, Álava +34 945184100 +34 945184126 www.smc.eu support.marketingeurope@smc.com

Lost motion	≤ 0.05
Impact/Vibration resistance	50/20 m/s²
Actuation type	Ball screw (LEKFS#), Ball screw + Belt (LEKFS#R/L)
Motor type	AC servo motor (100/200 VAC)
Encoder	Motor type S2, S3, S4: Incremental 17-bit encoder (Resolution: 131072 p/rev) Motor type T6, T7, T8: Absolute 22-bit encoder (Resolution: 4194304 p/rev) (For LECSB2-T, LECSS2-T) Motor type T6, T7, T8: Absolute 18-bit encoder (Resolution: 262144 p/rev) (For LECSC2-T)
Horizontal work load	40 Kg
Vertical work load	10 Kg
Speed	1000 mm/s
Max. Acceleration/deceleration	20000 mm/s²
Operating humidity range	90 % RH or less (No condensation)
Power Consumption	725 W
Lock: Holding force	197 W
Guide type	Linear guide
Motor size	60
Lock unit type	Non-magnetising lock
Lock unit power consumption	7,9 W
Technical graph 1	8655AK_graph2_en.jpg

Specifications are subject to change without prior notice and any obligation on the part of the manufacturer.

SMC CORPORATION Zuazobidea 14, 01012, Vitoria-Gasteiz, Álava +34 945184100 +34 945184126 www.smc.eu support.marketingeurope@smc.com

Dimensions

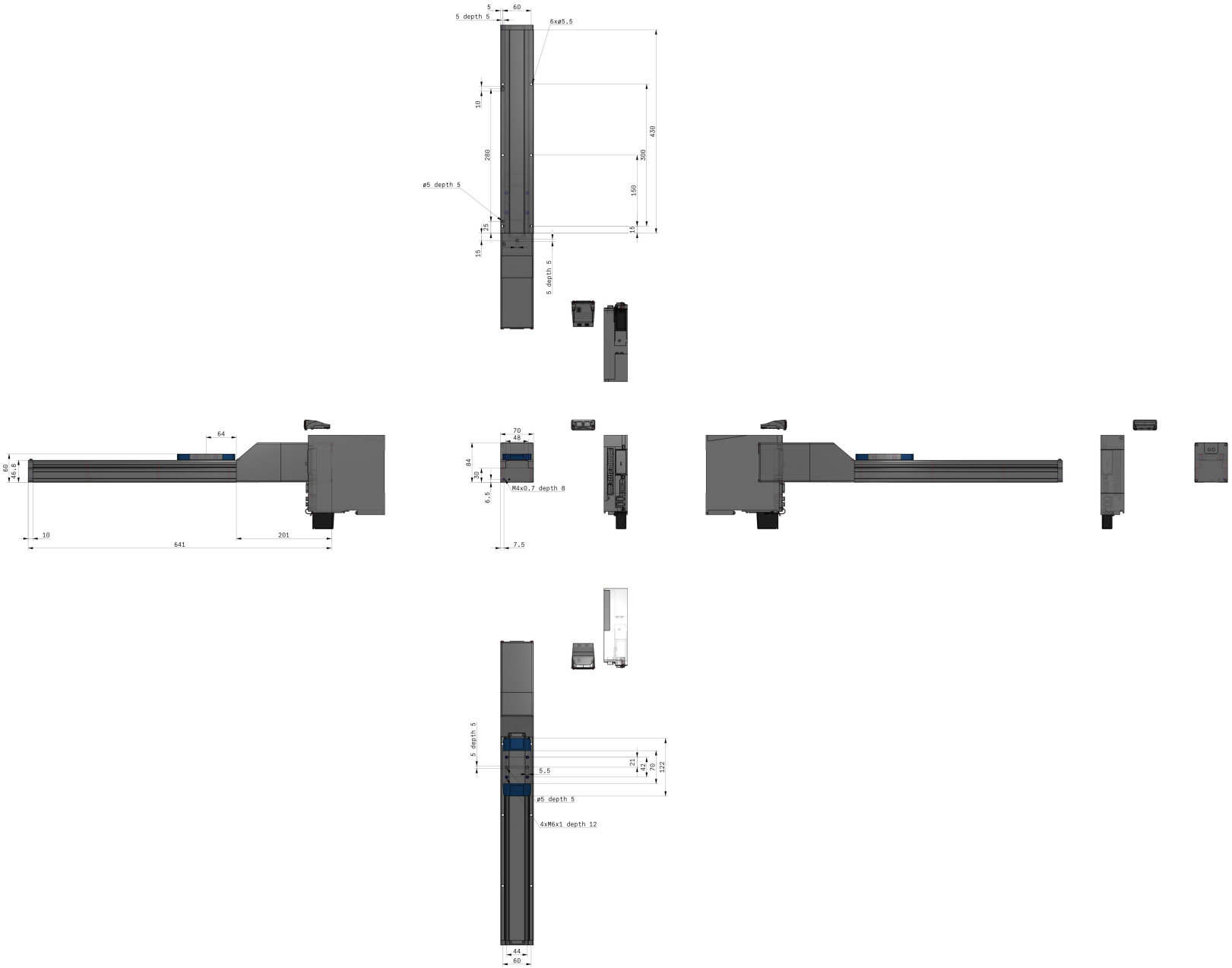

Specifications are subject to change without prior notice and any obligation on the part of the manufacturer.

SMC CORPORATION Zuazobidea 14, 01012, Vitoria-Gasteiz, Álava +34 945184100 +34 945184126 www.smc.eu support.marketingeurope@smc.com

Constructions

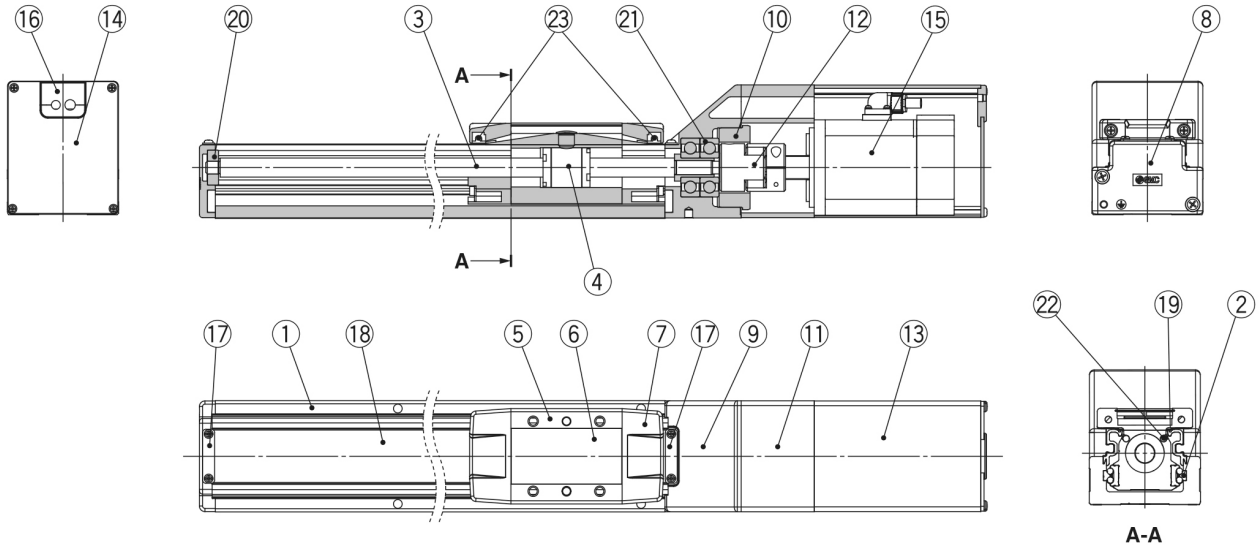

Component Parts

No.	Description	Material	Note
1	**Body**	Aluminium alloy	Anodised
2	**Rail guide**	—	
3	**Ball screw shaft**	—	
4	**Ball screw nut**	—	
5	**Table**	Aluminium alloy	Anodised
6	**Blanking plate**	Aluminium alloy	Anodised
7	**Seal band holder**	Synthetic resin	
8	**Housing A**	Aluminium die-casted	Coating
9	**Housing B**	Aluminium die-casted	Coating
10	**Bearing stopper**	Aluminium alloy	
11	**Motor mount**	Aluminium alloy	Coating
12	**Coupling**	—	
13	**Motor cover**	Aluminium alloy	Anodised
14	**End cover**	Aluminium alloy	Anodised
15	**Motor**	—	

No.	Description	Material	Note
16	**Rubber bushing**	NBR	
17	**Band stopper**	Stainless steel	
18	**Dust seal band**	Stainless steel	
19	**Seal magnet**	—	
20	**Bearing**	—	Stroke 300 mm or more
21	**Bearing**	—	
22	**Magnet**	—	
23	**Roller assembly**	—	Without grease application

Specifications are subject to change without prior notice and any obligation on the part of the manufacturer.

SMC CORPORATION Zuazobidea 14, 01012, Vitoria-Gasteiz, Álava +34 945184100 +34 945184126 www.smc.eu support.marketingeurope@smc.com

Additional information

Catalogue	LEKFS-B_EU.pdf
Declaration of conformity	newDoC_LEKF_TF1Z248EN.pdf newDoC_LEKF_TF1Z246EN-A.pdf newDoC_LEKF_TF125-481EN.pdf
Installation manuals	IM_LEKFS_TF2Z583EN.pdf
Operation manuals	OM_LEKFS_servoAC_OMZ0035_EN-B.pdf

Specifications are subject to change without prior notice and any obligation on the part of the manufacturer.

SMC CORPORATION Zuazobidea 14, 01012, Vitoria-Gasteiz, Álava +34 945184100 +34 945184126 www.smc.eu support.marketingeurope@smc.com