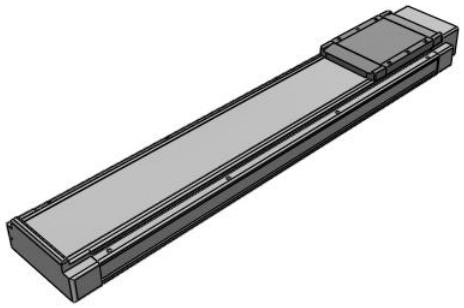

Standard Type, 100/200W - LEJS
LEJS40NZA-500

Datasheet

General series information

- Body size: 40 and 63 mm
- Stroke: 200 to 1500 mm
- High-precision and high-rigidity with a double axis linear guide construction
- Compatible with several motors: OMRON, Siemens AG, Beckhoff automation and more.

Standard specifications

Accuracy	Basic Type
Size	40
Motor Type	NZ (Mounting Type Z)
Lead Screw	A (LEJS40: 16mm; LEJS63: 20mm, LEJS100: 25mm)
Stroke	500 mm
Maximum ambient temperature	40 °C
Minimum ambient temperature	5 °C
Approvals	CE
Impact/Vibration resistance	50/20 m/s2
Horizontal work load	30kg
Vertical work load	5 kg
Speed	1200 mm/s
Max. Acceleration/deceleration	20000 mm/s2
Positioning repeatability	± 0.02 mm
Lost motion	0.1 max.
Weight	7.395 Kg

Specifications are subject to change without prior notice and any obligation on the part of the manufacturer.

SMC CORPORATION Zuazobidea 14, 01012, Vitoria-Gasteiz, Álava +34 945184100 +34 945184126 www.smc.eu support.marketingeurope@smc.com

Dimensions

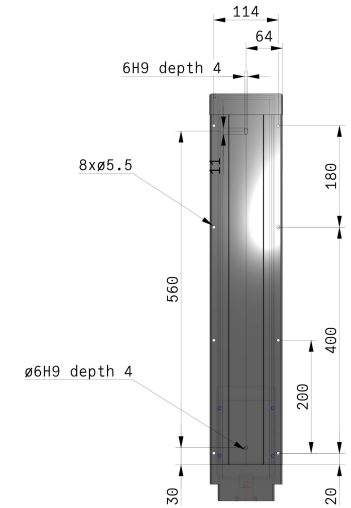

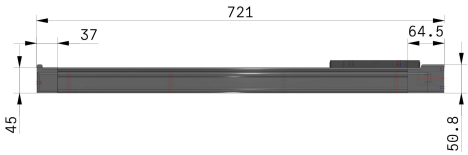

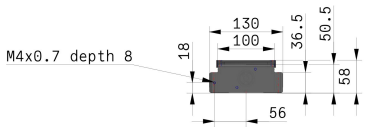



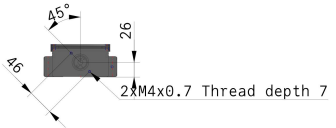

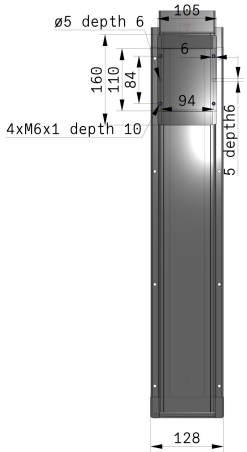

Specifications are subject to change without prior notice and any obligation on the part of the manufacturer.

SMC CORPORATION Zuazobidea 14, 01012, Vitoria-Gasteiz, Álava +34 945184100 +34 945184126 www.smc.eu support.marketingeurope@smc.com

Additional information

Catalogue LE_motorless-E_EU.pdf

Specifications are subject to change without prior notice and any obligation on the part of the manufacturer.

SMC CORPORATION Zuazobidea 14, 01012, Vitoria-Gasteiz, Álava +34 945184100 +34 945184126 www.smc.eu support.marketingeurope@smc.com