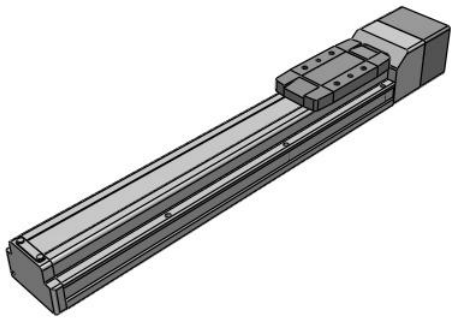

Ball Screw Drive - LEFS
LEFS32NZA-300

Datasheet

General series information

- Body size: 25, 32 and 40 mm
- Stroke: 50 to 1200 mm
- AC Servo Motor, 100/200/400W.

Standard specifications

Series	LEFS (Ball Screw Drive)
Accuracy	Basic Type
Size	32
Motor Mounting Position	In-line
Motor Type	NZ (Mounting Type Z)
Lead Screw	A (LEFS25, 12mm; LEFS32, 16mm; LEFS40, 20mm)
Stroke	300 mm
Auto Switch Mounting Bracket	None
Seal Band Stopper	Standard
Positioning Pin Hole	Housing B Bottom
Maximum ambient temperature	40 °C
Minimum ambient temperature	5 °C
Impact/Vibration resistance	50/20 m/s2
Horizontal work load	40 kg
Vertical work load	10 kg
Speed	1000 mm/s
Max. Acceleration/deceleration	2000 mm/s2
Positioning repeatability	± 0.02 mm
Lost motion	0.1 mm
Weight	3.400 Kg

Specifications are subject to change without prior notice and any obligation on the part of the manufacturer.

SMC CORPORATION Zuazobidea 14, 01012, Vitoria-Gasteiz, Álava +34 945184100 +34 945184126 www.smc.eu support.marketingeurope@smc.com

Dimensions

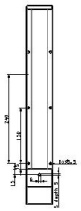

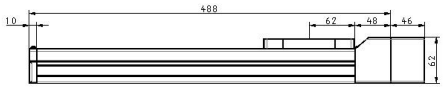

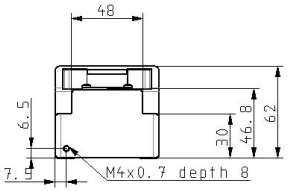

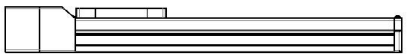

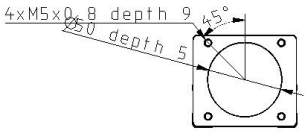

Specifications are subject to change without prior notice and any obligation on the part of the manufacturer.

SMC CORPORATION Zuazobidea 14, 01012, Vitoria-Gasteiz, Álava +34 945184100 +34 945184126 www.smc.eu support.marketingeurope@smc.com

Additional information

Catalogue	LE_motorless-E_EU.pdf

Specifications are subject to change without prior notice and any obligation on the part of the manufacturer.

SMC CORPORATION Zuazobidea 14, 01012, Vitoria-Gasteiz, Álava +34 945184100 +34 945184126 www.smc.eu support.marketingeurope@smc.com