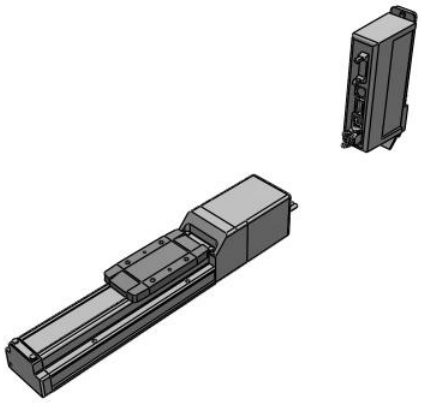

Standard Model - LEFS
LEFS25A-100-R5C6185

Datasheet

General series information

- Body size: 16, 25, 32 and 40 mm
- Stroke: 50 to 1200 mm
- Acceleration: up to 3000 mm/s²
- Speed: up to 1200 mm/s
- Step and servo motor types
- Encoder: incremental.

Standard specifications

Accuracy	Basic Type
Size	25 mm
Motor Mounting Position	In-line
Motor	Step Motor [Servo 24 VDC]
Lead Screw	A (Size 16: 10 mm, Size 25: 12 mm, Size 32: 16 mm, Size 40: 20 mm)
Stroke	100 mm
Motor Option	w/o Lock
Auto Switch Mounting Bracket	None
Seal Band Stopper	Standard
Positioning Pin Hole	Housing B Bottom
Actuator Cable	R (Robotic Flexible Cable)
Actuator Cable Length	5 (5 m)
Controller	C (JXC, Step Motor Controller)
I/O cabling for LEC controllers	Without Cable
Protocol	6 (Parallel Input, PNP)
Suffix	1 (For Single Axis)

Specifications are subject to change without prior notice and any obligation on the part of the manufacturer.

SMC CORPORATION Zuazobidea 14, 01012, Vitoria-Gasteiz, Álava +34 945184100 +34 945184126 www.smc.eu support.marketingeurope@smc.com

Controller Mounting	8 (DIN Rail)
I/O cabling for JXC Controllers and communication plug connector	5 (I/O Cable, 5 m)
Maximum ambient temperature	40 °C;40 °C
Minimum ambient temperature	5 °C;5 °C
General power supply	24 V DC ±10 %;24 V DC ±10 %
Approvals	CE;UL/cUL
Encoder	Incremental A/B phase (800 pulse/rotation)

Specifications are subject to change without prior notice and any obligation on the part of the manufacturer.

SMC CORPORATION Zuazobidea 14, 01012, Vitoria-Gasteiz, Álava +34 945184100 +34 945184126 www.smc.eu support.marketingeurope@smc.com

Dimensions

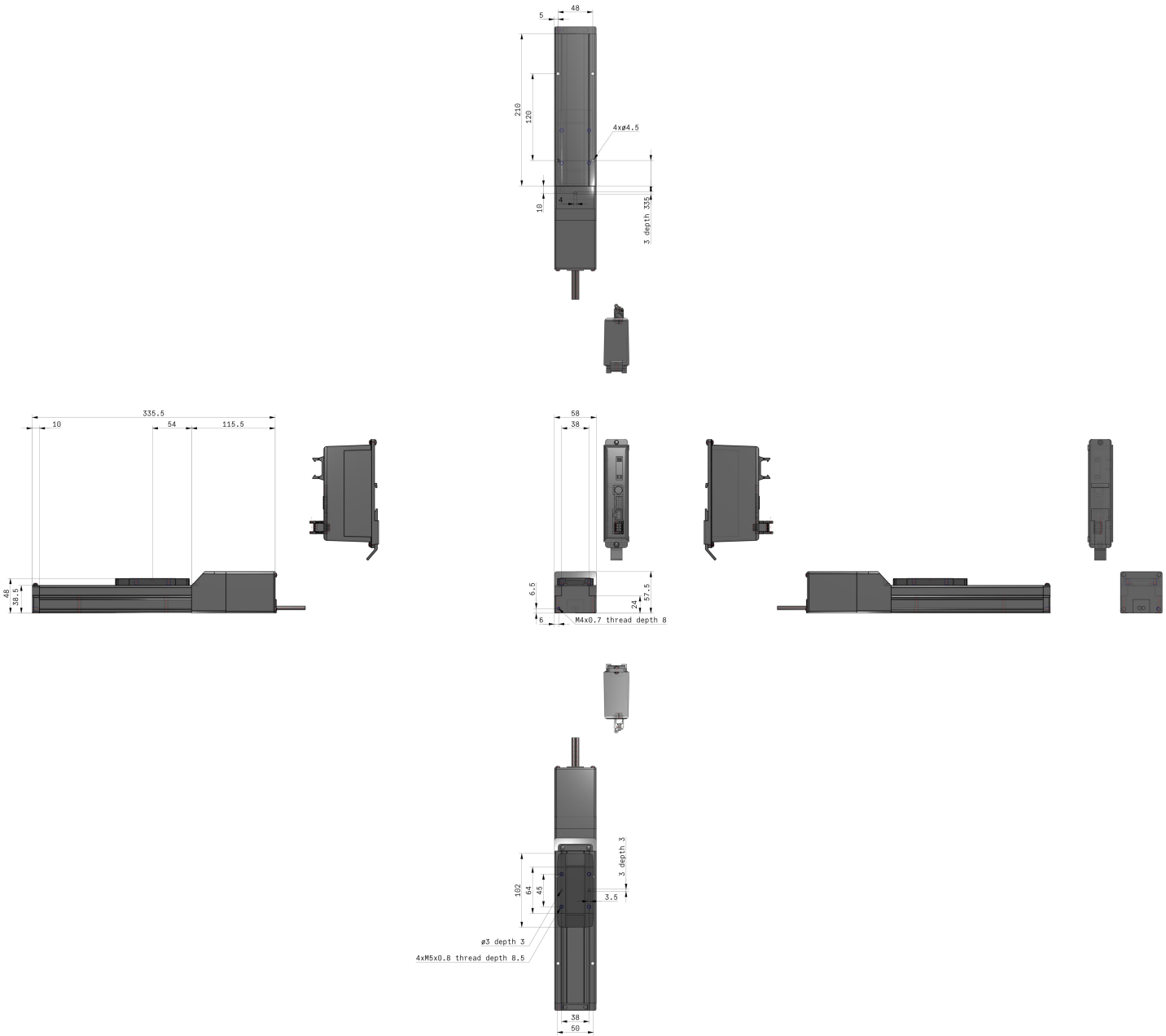

Specifications are subject to change without prior notice and any obligation on the part of the manufacturer.

SMC CORPORATION Zuazobidea 14, 01012, Vitoria-Gasteiz, Álava +34 945184100 +34 945184126 www.smc.eu support.marketingeurope@smc.com

Additional information

Catalogue	LEF-F_EU.pdf
Declaration of conformity	newDoC_LEFx_11-LEFx_stepDC-servoDC_EN.pdf newDoC_LEFx_TF125-467EN.pdf
Installation manuals	IM_LEF_StepDC_EN_A.pdf IM_LEFx_servoDC_EN.pdf
Operation manuals	OM_LEFx_stepDC-servoDC_EN-B.pdf

Specifications are subject to change without prior notice and any obligation on the part of the manufacturer.

SMC CORPORATION Zuazobidea 14, 01012, Vitoria-Gasteiz, Álava +34 945184100 +34 945184126 www.smc.eu support.marketingeurope@smc.com