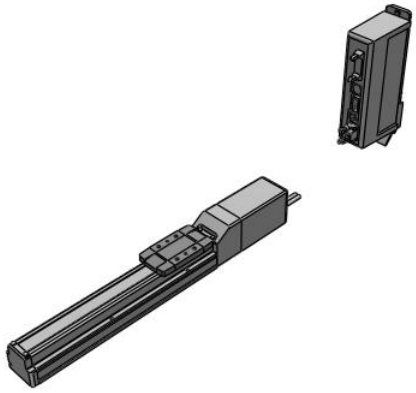

# Standard Model - LEFS
## LEFS16A-150-R5C6185

Datasheet

## General series information

- Body size: 16, 25, 32 and 40 mm
- Stroke: 50 to 1200 mm
- Acceleration: up to 3000 mm/s²
- Speed: up to 1200 mm/s
- Step and servo motor types
- Encoder: incremental.

## Standard specifications

| | |
|---|---|
| Accuracy | Basic Type |
| Size | 16 mm |
| Motor Mounting Position | In-line |
| Motor | Step Motor [Servo 24 VDC] |
| Lead Screw | A (Size 16: 10 mm, Size 25: 12 mm, Size 32: 16 mm, Size 40: 20 mm) |
| Stroke | 150 mm |
| Motor Option | w/o Lock |
| Auto Switch Mounting Bracket | None |
| Seal Band Stopper | Standard |
| Positioning Pin Hole | Housing B Bottom |
| Actuator Cable | R (Robotic Flexible Cable) |
| Actuator Cable Length | 5 (5 m) |
| Controller | C (JXC, Step Motor Controller) |
| I/O cabling for LEC controllers | Without Cable |
| Protocol | 6 (Parallel Input, PNP) |
| Suffix | 1 (For Single Axis) |

Specifications are subject to change without prior notice and any obligation on the part of the manufacturer.



SMC CORPORATION Zuazobidea 14, 01012, Vitoria-Gasteiz, Álava +34 945184100 +34 945184126 www.smc.eu support.marketingeurope@smc.com

| | |
|---|---|
| Controller Mounting | 8 (DIN Rail) |
| I/O cabling for JXC Controllers and communication plug connector | 5 (I/O Cable, 5 m) |
| Maximum ambient temperature | 40 °C;40 °C |
| Minimum ambient temperature | 5 °C;5 °C |
| General power supply | 24 V DC ±10 %;24 V DC ±10 % |
| Approvals | CE;UL/cUL |
| Encoder | Incremental A/B phase (800 pulse/rotation) |

Specifications are subject to change without prior notice and any obligation on the part of the manufacturer.



SMC CORPORATION Zuazobidea 14, 01012, Vitoria-Gasteiz, Álava +34 945184100 +34 945184126 www.smc.eu support.marketingeurope@smc.com

# Dimensions

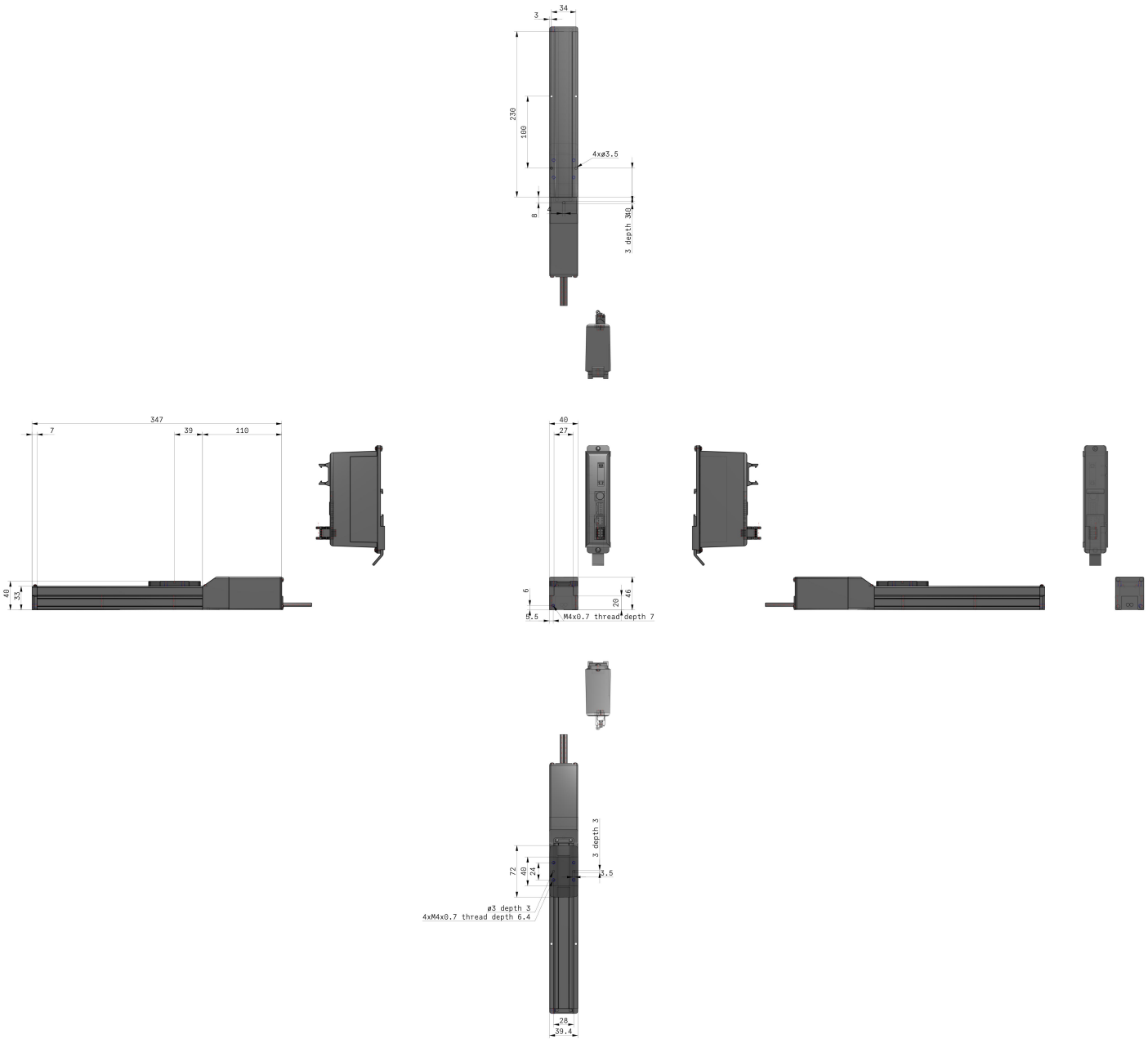


Specifications are subject to change without prior notice and any obligation on the part of the manufacturer.



SMC CORPORATION Zuazobidea 14, 01012, Vitoria-Gasteiz, Álava +34 945184100 +34 945184126 www.smc.eu support.marketingeurope@smc.com

# Additional information

| | |
|---|---|
| Catalogue | LEF-F_EU.pdf |
| Declaration of conformity | newDoC_LEFx_11-LEFx_stepDC-servoDC_EN.pdf<br>newDoC_LEFx_TF125-467EN.pdf |
| Installation manuals | IM_LEF_StepDC_EN_A.pdf<br>IM_LEFx_servoDC_EN.pdf |
| Operation manuals | OM_LEFx_stepDC-servoDC_EN-B.pdf |

Specifications are subject to change without prior notice and any obligation on the part of the manufacturer.



SMC CORPORATION Zuazobidea 14, 01012, Vitoria-Gasteiz, Álava +34 945184100 +34 945184126 www.smc.eu support.marketingeurope@smc.com