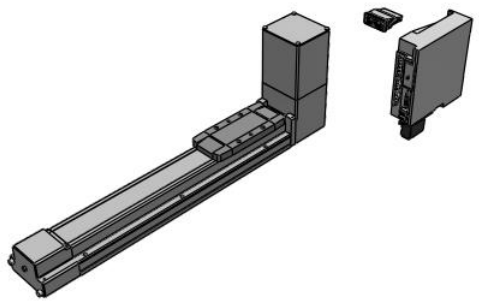

AC Servo Motor 100/200/400W - LEFB

LEFB40T8S-300-R5PD21

Datasheet

General series information

- Body size: 25, 32 and 40 mm
- Stroke: 300 to 3000 mm.

Standard specifications

Size	40
Motor Mounting Position	Top Mounting Type
AC Servo Motor	T8 (400W Output, Absolute Encoder, LECSS2)
Stroke	300 mm
Motor Option	None
Auto Switch Mounting Bracket	None
Positioning Pin Hole	Housing B Bottom
Actuator Cable	R (Robotic Flexible Cable)
Cable length	5 (5m)
Driver	PD2 (LECSND2-T-P/PROFINET®, 200 V to 240 V)
I/O Connector	1 (1.5 m)
Approvals	CE

Specifications are subject to change without prior notice and any obligation on the part of the manufacturer.

SMC CORPORATION Zuazobidea 14, 01012, Vitoria-Gasteiz, Álava +34 945184100 +34 945184126 www.smc.eu support.marketingeurope@smc.com

Dimensions

Specifications are subject to change without prior notice and any obligation on the part of the manufacturer.

SMC CORPORATION Zuazobidea 14, 01012, Vitoria-Gasteiz, Álava +34 945184100 +34 945184126 www.smc.eu support.marketingeurope@smc.com

Additional information

Catalogue	LEF-F_EU.pdf
Declaration of conformity	newDoC_LEFx_11-LEFx_servoAC_LECSS-T_EN.pdf newDoC_LEFx_TF125-470EN.pdf newDoC_LEFx_TF125-471EN.pdf newDoC_LEFx_TF125-469EN.pdf newDoC_LEFx_11-LEFx_servoAC_LECSA_EN.pdf newDoC_LEFx_TF125-468EN.pdf newDoC_LEFx_11-LEFx_servoDC_servoAC_LECSx_EN.pdf newDoC_LEFx_11-LEFx_servoDC_servoAC_LECYx_EN.pdf
Installation manuals	IM_LEFx_servoAC_EN.pdf
Operation manuals	OM_LEFx_SERVOAC_LECSx_LECSS-T_LECY_EN.pdf

Specifications are subject to change without prior notice and any obligation on the part of the manufacturer.

SMC CORPORATION Zuazobidea 14, 01012, Vitoria-Gasteiz, Álava +34 945184100 +34 945184126 www.smc.eu support.marketingeurope@smc.com