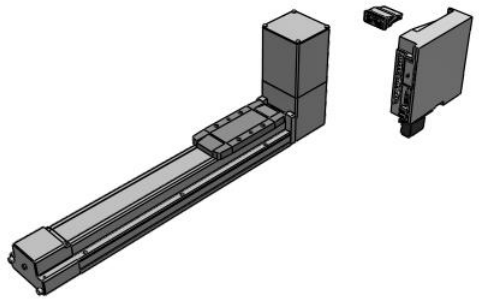

# AC Servo Motor 100/200/400W - LEFB

## LEFB40T8S-300-R59D21

Datasheet

## General series information

- Body size: 25, 32 and 40 mm
- Stroke: 300 to 3000 mm.

## Standard specifications

| | |
|---|---|
| Size | 40 |
| Motor Mounting Position | Top Mounting Type |
| AC Servo Motor | T8 (400W Output, Absolute Encoder, LECSS2) |
| Stroke | 300 mm |
| Motor Option | None |
| Auto Switch Mounting Bracket | None |
| Positioning Pin Hole | Housing B Bottom |
| Actuator Cable | R (Robotic Flexible Cable) |
| Cable length | 5 (5m) |
| Driver | 9D2 (LECSND2-T-9/EtherNet/IP™, 200 V to 240 V) |
| I/O Connector | 1 (1.5 m) |
| Approvals | CE |

Specifications are subject to change without prior notice and any obligation on the part of the manufacturer.



SMC CORPORATION Zuazobidea 14, 01012, Vitoria-Gasteiz, Álava +34 945184100 +34 945184126 www.smc.eu support.marketingeurope@smc.com

# Dimensions

Specifications are subject to change without prior notice and any obligation on the part of the manufacturer.



SMC CORPORATION Zuazobidea 14, 01012, Vitoria-Gasteiz, Álava +34 945184100 +34 945184126 www.smc.eu support.marketingeurope@smc.com

# Additional information

| | |
|---|---|
| Catalogue | LEF-F_EU.pdf |
| Declaration of conformity | newDoC_LEFx_11-LEFx_servoAC_LECSS-T_EN.pdf<br>newDoC_LEFx_TF125-470EN.pdf<br>newDoC_LEFx_TF125-471EN.pdf<br>newDoC_LEFx_TF125-469EN.pdf<br>newDoC_LEFx_11-LEFx_servoAC_LECSA_EN.pdf<br>newDoC_LEFx_TF125-468EN.pdf<br>newDoC_LEFx_11-LEFx_servoDC_servoAC_LECSx_EN.pdf<br>newDoC_LEFx_11-LEFx_servoDC_servoAC_LECYx_EN.pdf |
| Installation manuals | IM_LEFx_servoAC_EN.pdf |
| Operation manuals | OM_LEFx_SERVOAC_LECSx_LECSS-T_LECY_EN.pdf |

Specifications are subject to change without prior notice and any obligation on the part of the manufacturer.



SMC CORPORATION Zuazobidea 14, 01012, Vitoria-Gasteiz, Álava +34 945184100 +34 945184126 www.smc.eu support.marketingeurope@smc.com