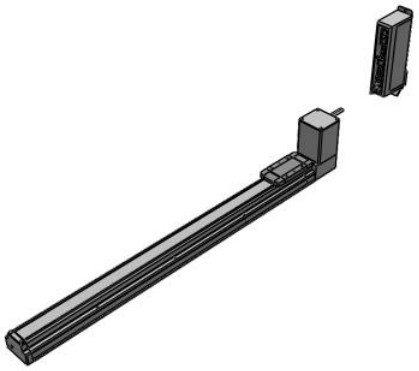

# Belt Drive, 24V DC - LEFB
## LEFB25T-500-R5CL18

Datasheet

## General series information

- Body size: 16, 25 and 32 mm.
- Stroke: 300 to 2000 mm.
- Step and servo motor types.

## Standard specifications

| | |
|---|---|
| Size | 25 |
| Motor | Step Motor (Servo 24 VDC) |
| Stroke | 500 mm |
| Motor Option | w/o Lock |
| Auto Switch Mounting Bracket | None |
| Seal Band Stopper | Standard |
| Positioning Pin Hole | Housing B Bottom |
| Actuator Cable | R (Robotic Flexible Cable) |
| Actuator Cable Length | 5 (5m) |
| Controller | C (JXC, Step Motor Controller) |
| I/O cabling for LEC controllers | Without Cable |
| Protocol | L (IO-Link) |
| Suffix | 1 (For Single Axis) |
| Controller Mounting | 8 (DIN Rail) |
| I/O cabling for JXC Controllers and communication plug connector | None |
| Approvals | CE |
| Impact/Vibration resistance | 50/20 m/s2 |
| Encoder | Incremental A/B phase (800 pulse/rotation) |
| Power supply | 24 VDC ±10 % |

*Specifications are subject to change without prior notice and any obligation on the part of the manufacturer.*



**SMC CORPORATION** Zuazobidea 14, 01012, Vitoria-Gasteiz, Álava +34 945184100 +34 945184126 www.smc.eu support.marketingeurope@smc.com

| | |
|---|---|
| Horizontal work load | 5 - 2000 mm/s |
| Max. Acceleration/deceleration | 3000 mm/s2 |
| Positioning repeatability | ± 0.08 mm |
| Lost motion | 0.1 mm |
| Operating temperature range | 5 - 40 ºC |

Specifications are subject to change without prior notice and any obligation on the part of the manufacturer.



SMC CORPORATION Zuazobidea 14, 01012, Vitoria-Gasteiz, Álava +34 945184100 +34 945184126 www.smc.eu support.marketingeurope@smc.com

# Dimensions

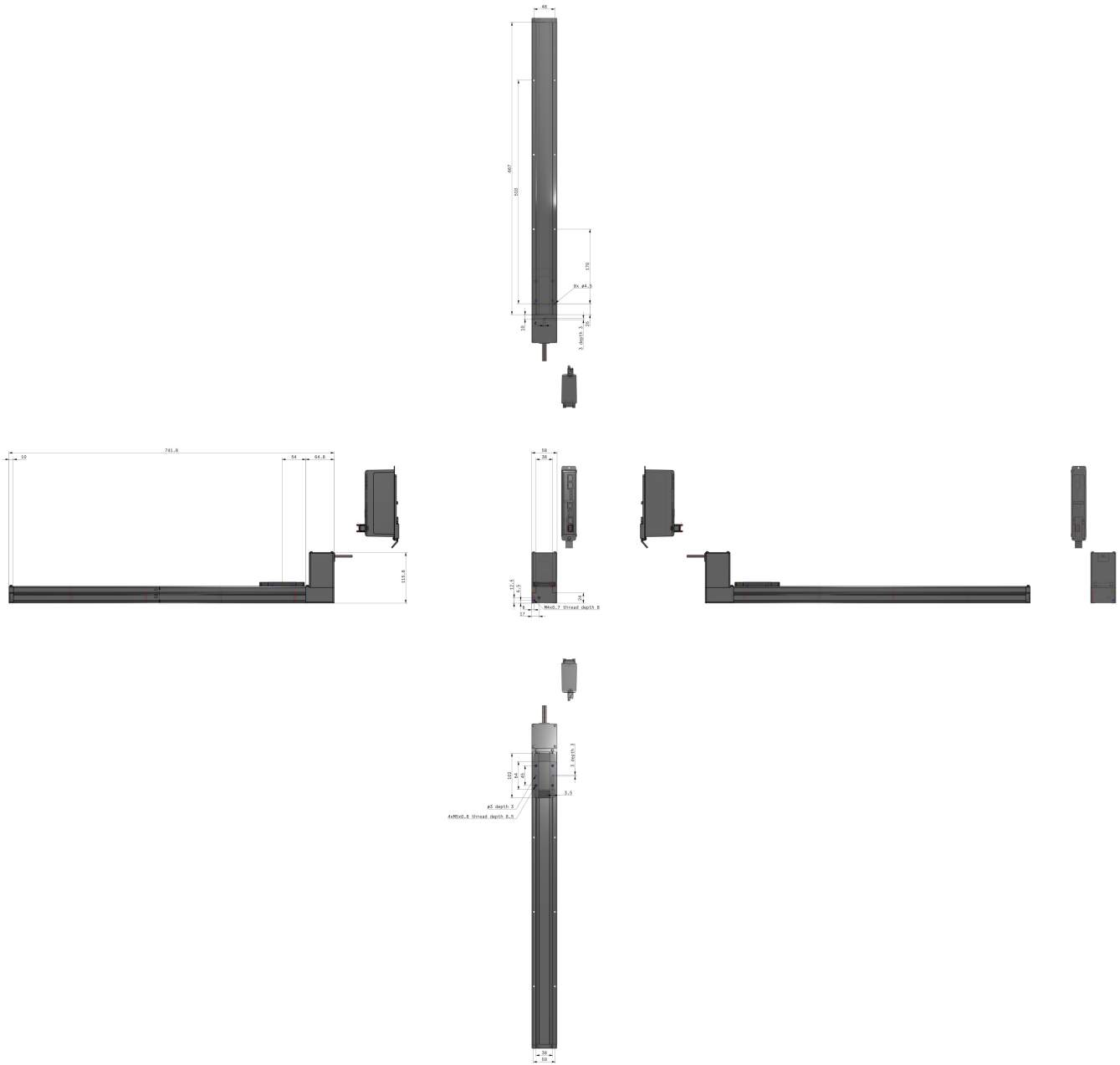


Specifications are subject to change without prior notice and any obligation on the part of the manufacturer.



SMC CORPORATION Zuazobidea 14, 01012, Vitoria-Gasteiz, Álava +34 945184100 +34 945184126 www.smc.eu support.marketingeurope@smc.com

# Constructions

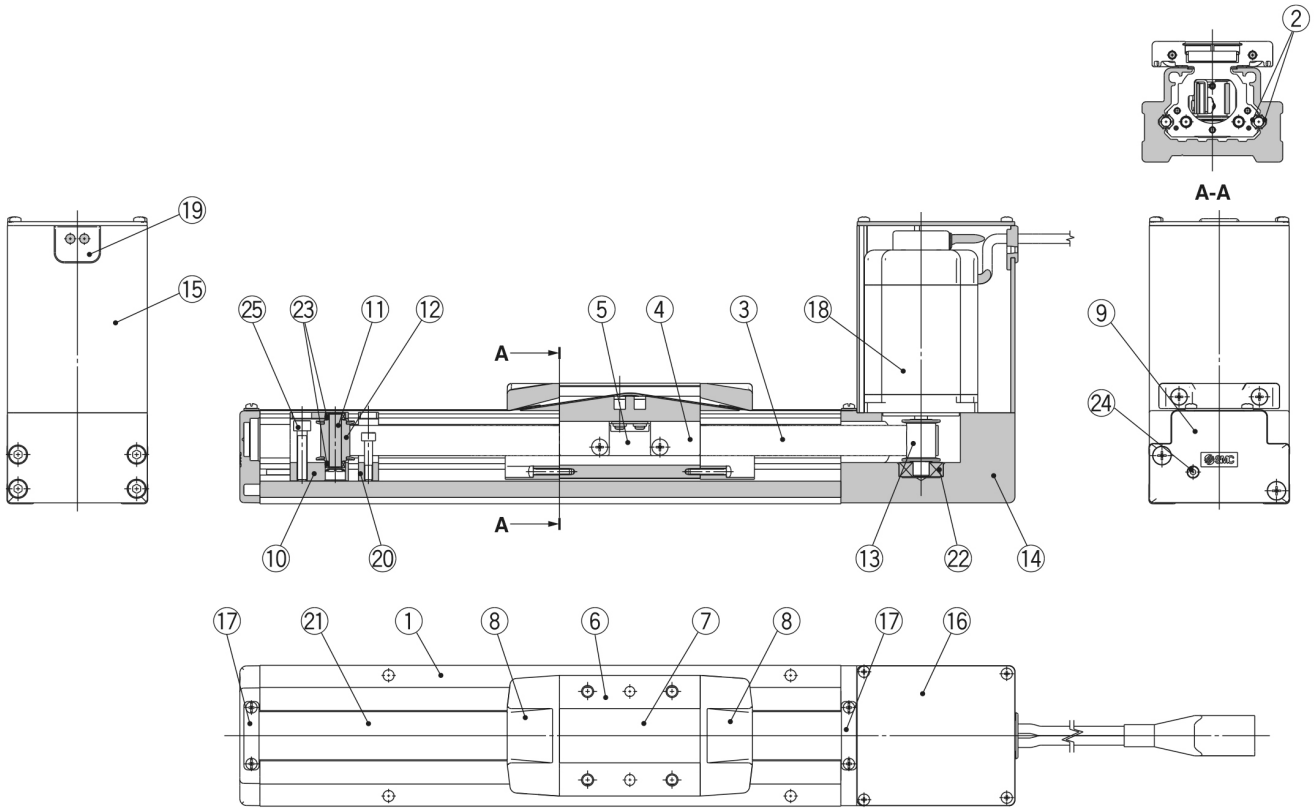


| No. | Description | Material | Note |
|---|---|---|---|
| 1 | **Body** | Aluminium alloy | Anodised |
| 2 | **Rail guide** | — | |
| 3 | **Belt** | — | |
| 4 | **Belt holder** | Carbon steel | Chromating |
| 5 | **Belt stopper** | Aluminium alloy | Anodised |
| 6 | **Table** | Aluminium alloy | Anodised |
| 7 | **Blanking plate** | Aluminium alloy | Anodised |
| 8 | **Seal band holder** | Synthetic resin | |
| 9 | **Housing A** | Aluminium die-cast | Coating |
| 10 | **Pulley holder** | Aluminium alloy | |
| 11 | **Pulley shaft** | Stainless steel | |
| 12 | **End pulley** | Aluminium alloy | Anodised |
| 13 | **Motor pulley** | Aluminium alloy | Anodised |
| 14 | **Motor mount** | Aluminium alloy | Anodised |
| 15 | **Motor cover** | Aluminium alloy | Anodised |
| 16 | **End cover** | Aluminium alloy | Anodised |
| 17 | **Band stopper** | Stainless steel | |
| 18 | **Motor** | — | |
| 19 | **Rubber bushing** | NBR | |
| 20 | **Stopper** | Aluminium alloy | |
| 21 | **Dust seal band** | Stainless steel | |
| 22 | **Bearing** | — | |
| 23 | **Bearing** | — | |
| 24 | **Tension adjustment bolt** | Chromium molybdenum steel | Chromating |
| 25 | **Pulley fixing bolt** | Chromium molybdenum steel | Chromating |

*Specifications are subject to change without prior notice and any obligation on the part of the manufacturer.*



**SMC CORPORATION** Zuazobidea 14, 01012, Vitoria-Gasteiz, Álava +34 945184100 +34 945184126 www.smc.eu support.marketingeurope@smc.com

# Additional information

| | |
|---|---|
| Catalogue | LEF-F_EU.pdf |
| Declaration of conformity | newDoC_LEFx_11-LEFx_stepDC-servoDC_EN.pdf<br>newDoC_LEFx_TF125-467EN.pdf |
| Installation manuals | IM_LEF_StepDC_EN_A.pdf<br>IM_LEFx_servoDC_EN.pdf |
| Operation manuals | OM_LEFx_stepDC-servoDC_EN-B.pdf |

Specifications are subject to change without prior notice and any obligation on the part of the manufacturer.



SMC CORPORATION Zuazobidea 14, 01012, Vitoria-Gasteiz, Álava +34 945184100 +34 945184126 www.smc.eu support.marketingeurope@smc.com