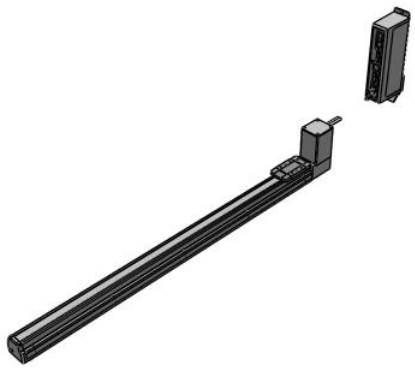

Belt Drive, 24V DC - LEFB
LEFB16T-500-R5CL18

Datasheet

General series information

- Body size: 16, 25 and 32 mm.
- Stroke: 300 to 2000 mm.
- Step and servo motor types.

Standard specifications

Size	16
Motor	Step Motor (Servo 24 VDC)
Stroke	500 mm
Motor Option	w/o Lock
Auto Switch Mounting Bracket	None
Seal Band Stopper	Standard
Positioning Pin Hole	Housing B Bottom
Actuator Cable	R (Robotic Flexible Cable)
Actuator Cable Length	5 (5m)
Controller	C (JXC, Step Motor Controller)
I/O cabling for LEC controllers	Without Cable
Protocol	L (IO-Link)
Suffix	1 (For Single Axis)
Controller Mounting	8 (DIN Rail)
I/O cabling for JXC Controllers and communication plug connector	None
Approvals	CE
Impact/Vibration resistance	50/20 m/s2
Encoder	Incremental A/B phase (800 pulse/rotation)
Power supply	24 VDC ±10 %

Specifications are subject to change without prior notice and any obligation on the part of the manufacturer.

SMC CORPORATION Zuazobidea 14, 01012, Vitoria-Gasteiz, Álava +34 945184100 +34 945184126 www.smc.eu support.marketingeurope@smc.com

Horizontal work load	48 - 1100 mm/s
Speed	1 kg
Max. Acceleration/deceleration	3000 mm/s2
Positioning repeatability	± 0.08 mm
Lost motion	0.1 mm
Operating temperature range	5 - 40 ºC

Specifications are subject to change without prior notice and any obligation on the part of the manufacturer.

SMC CORPORATION Zuazobidea 14, 01012, Vitoria-Gasteiz, Álava +34 945184100 +34 945184126 www.smc.eu support.marketingeurope@smc.com

Dimensions

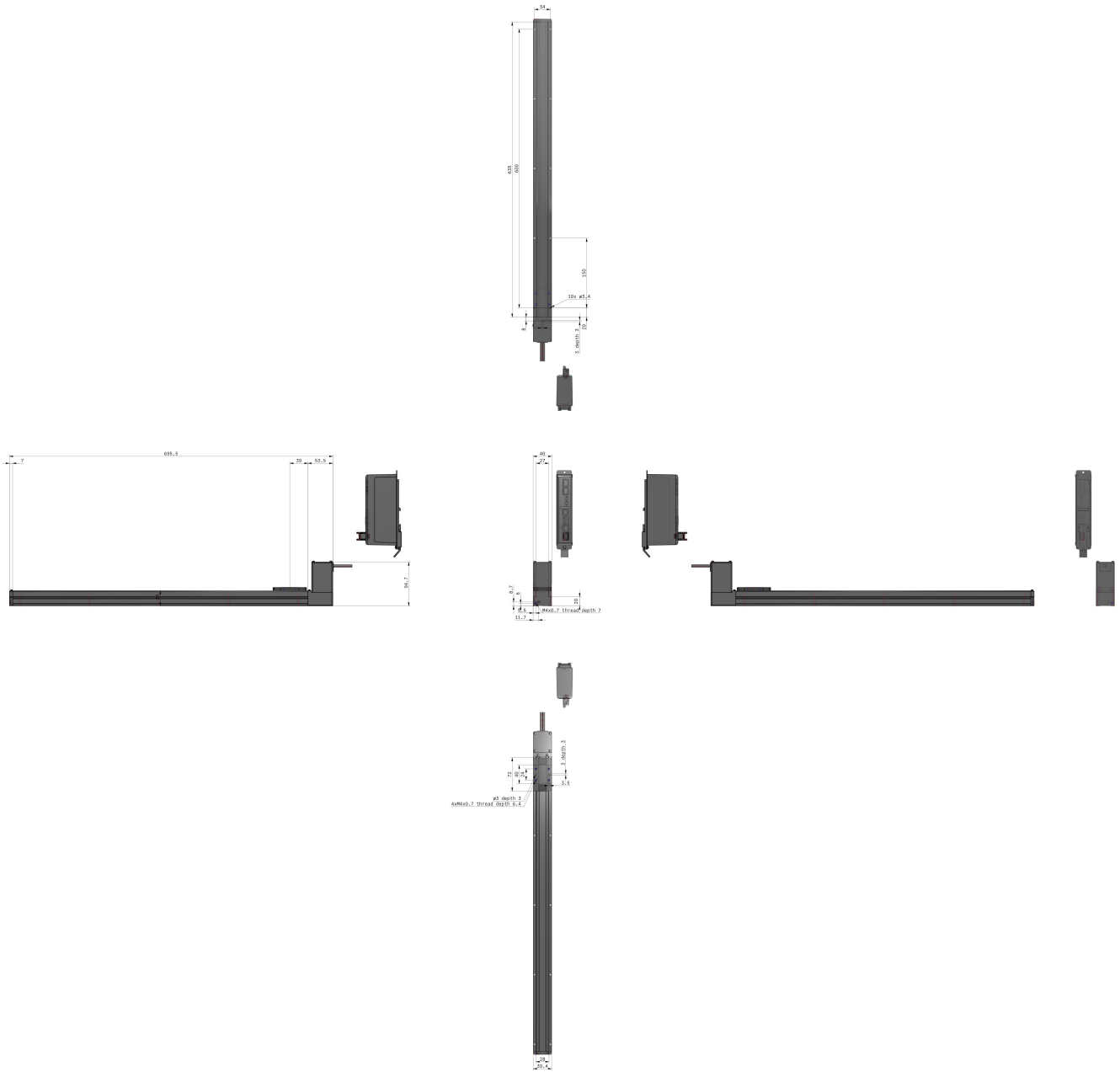

Specifications are subject to change without prior notice and any obligation on the part of the manufacturer.

SMC CORPORATION Zuazobidea 14, 01012, Vitoria-Gasteiz, Álava +34 945184100 +34 945184126 www.smc.eu support.marketingeurope@smc.com

Constructions

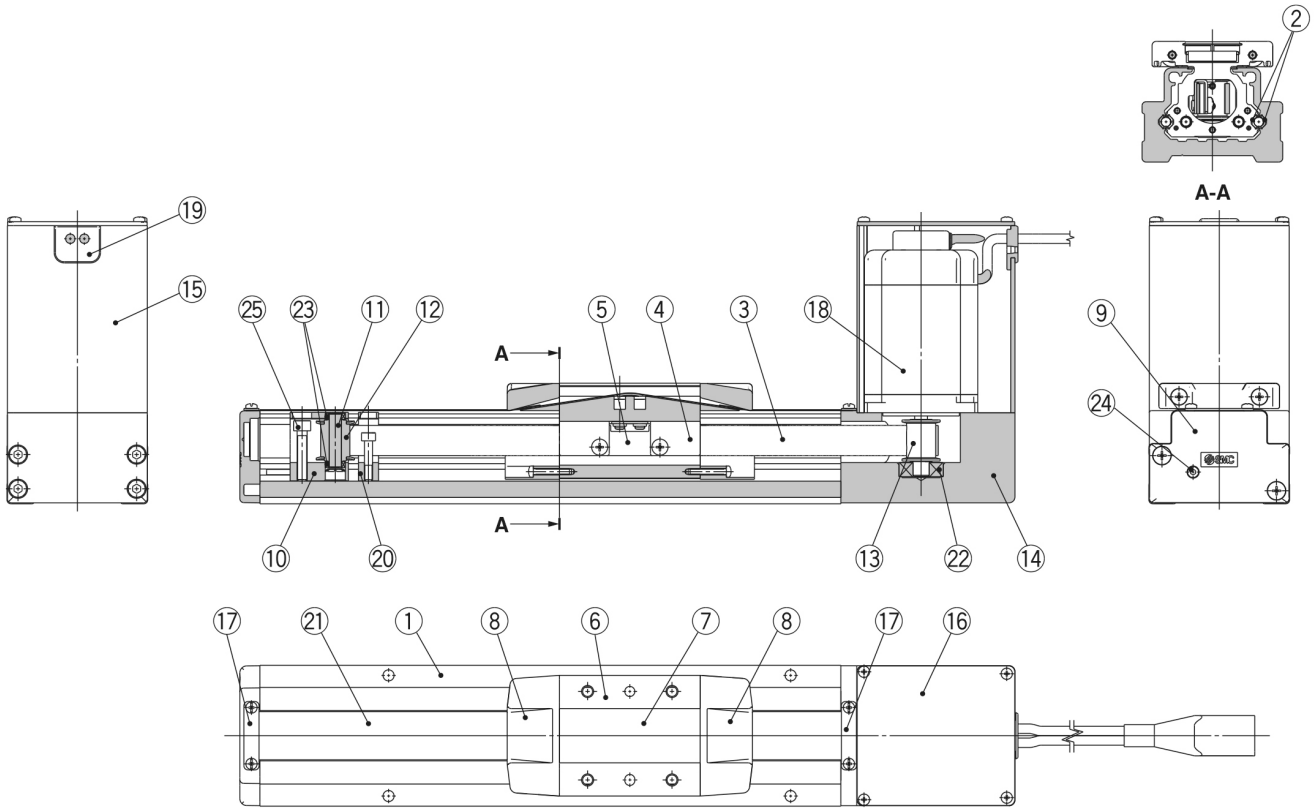

No.	Description	Material	Note
1	**Body**	Aluminium alloy	Anodised
2	**Rail guide**	—	
3	**Belt**	—	
4	**Belt holder**	Carbon steel	Chromating
5	**Belt stopper**	Aluminium alloy	Anodised
6	**Table**	Aluminium alloy	Anodised
7	**Blanking plate**	Aluminium alloy	Anodised
8	**Seal band holder**	Synthetic resin	
9	**Housing A**	Aluminium die-cast	Coating
10	**Pulley holder**	Aluminium alloy	
11	**Pulley shaft**	Stainless steel	
12	**End pulley**	Aluminium alloy	Anodised
13	**Motor pulley**	Aluminium alloy	Anodised
14	**Motor mount**	Aluminium alloy	Anodised
15	**Motor cover**	Aluminium alloy	Anodised
16	**End cover**	Aluminium alloy	Anodised
17	**Band stopper**	Stainless steel	
18	**Motor**	—	
19	**Rubber bushing**	NBR	
20	**Stopper**	Aluminium alloy	
21	**Dust seal band**	Stainless steel	
22	**Bearing**	—	
23	**Bearing**	—	
24	**Tension adjustment bolt**	Chromium molybdenum steel	Chromating
25	**Pulley fixing bolt**	Chromium molybdenum steel	Chromating

Specifications are subject to change without prior notice and any obligation on the part of the manufacturer.

SMC CORPORATION Zuazobidea 14, 01012, Vitoria-Gasteiz, Álava +34 945184100 +34 945184126 www.smc.eu support.marketingeurope@smc.com

Additional information

Catalogue	LEF-F_EU.pdf
Declaration of conformity	newDoC_LEFx_11-LEFx_stepDC-servoDC_EN.pdf newDoC_LEFx_TF125-467EN.pdf
Installation manuals	IM_LEF_StepDC_EN_A.pdf IM_LEFx_servoDC_EN.pdf
Operation manuals	OM_LEFx_stepDC-servoDC_EN-B.pdf

Specifications are subject to change without prior notice and any obligation on the part of the manufacturer.

SMC CORPORATION Zuazobidea 14, 01012, Vitoria-Gasteiz, Álava +34 945184100 +34 945184126 www.smc.eu support.marketingeurope@smc.com