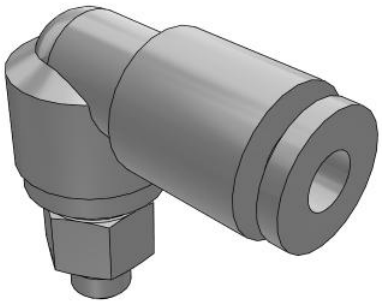

Metric - KS
KSL04-M5

Datasheet

General series information

- Rotary, One-touch fitting (standard)
- Metric threads
- Tube OD: Ø4, Ø6, Ø8, Ø10, Ø12
- Maximum operating pressure: 1.0 MPa
- Ambient & fluid temperature: -5 to 60°C

Standard specifications

Sealant	w/o Sealant
Applicable Tubing O.D.	Ø4 mm
Port Size	M5 (M5 x 0.8)
Model	L (Male Elbow)
Pressure medium	Air
Maximum ambient temperature	60 °C
Minimum ambient temperature	-5 °C (no Freezing)
Usable tubing material	Nylon, Soft nylon, Polyurethane
Weight	0.009 Kg

Specifications are subject to change without prior notice and any obligation on the part of the manufacturer.

SMC United Kingdom +34 945184126 sales@smc.uk

Dimensions

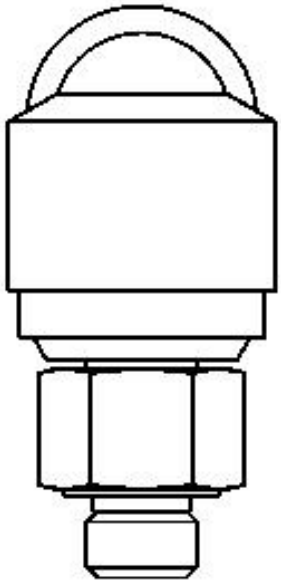

Specifications are subject to change without prior notice and any obligation on the part of the manufacturer.

SMC United Kingdom +34 945184126 sales@smc.uk

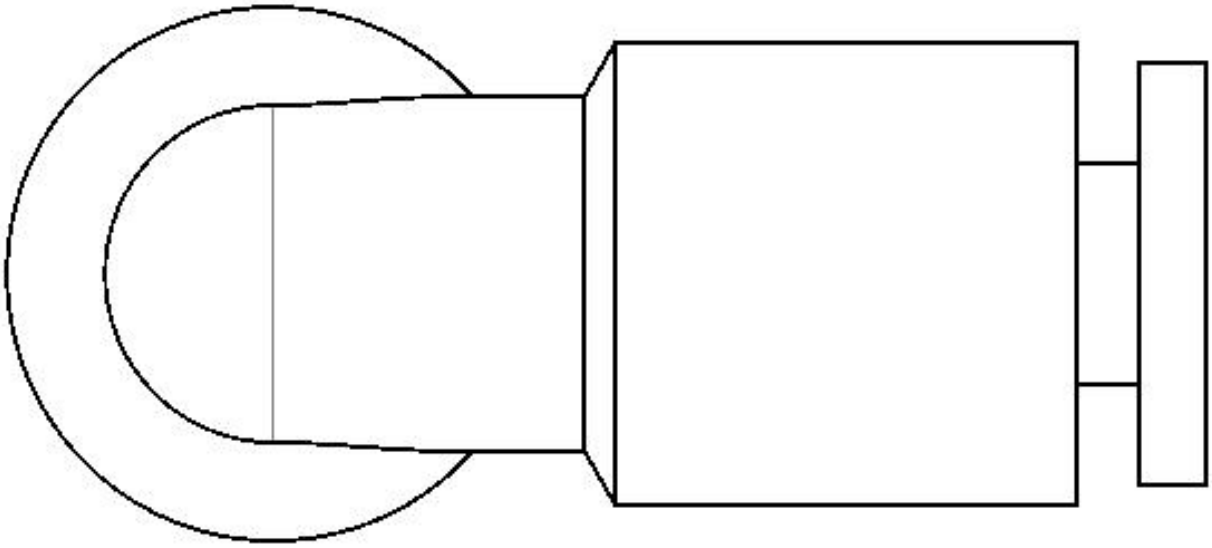

Specifications are subject to change without prior notice and any obligation on the part of the manufacturer.

SMC United Kingdom +34 945184126 sales@smc.uk

Additional information

Catalogue	KS_KX_EU.pdf

Specifications are subject to change without prior notice and any obligation on the part of the manufacturer.

SMC United Kingdom +34 945184126 sales@smc.uk