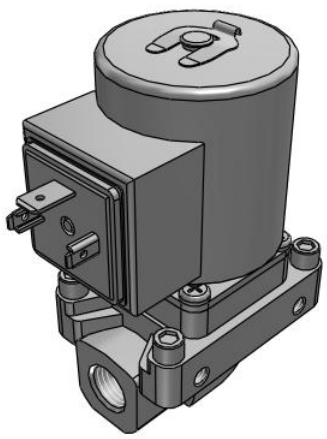

JSXZ, Zero Differential Pressure Type Pilot Operated, N.C.

JSXZ31-CN02F-5DN

Datasheet

General series information

- Applicable fluid: air, water, oil
- Flow rate up to 145 l/min (water)
- Orifice diameter: 10 to 25 mm
- Port size: 1/4” to 1”
- Body material: stainless steel, brass and aluminium
- Coil material: stainless steel
- Enclosure: IP67.

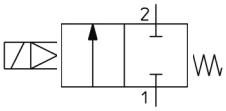

Directional control valve 2/2-way valve, closed normal position With a combinationed control by solenoid and pilot valve control Return with mechanical control spring

Standard specifications

Size	3 (30)
Body Material	C (Brass)
Seal Material	N (NBR)
Port Size	02 (1/4)
Thread Type	F (G)
Rated voltage	5 (24 VDC)
Electrical Entry	DN (DIN Terminal w/o Connector, w/Surge Voltage Suppressor)
Oil-free Option	None
Bracket	None
Maximum temperature of pressure medium	60 °C
Minimum temperature of pressure medium	Air: -10 °C, Water: 1 °C, Oil: -5 °C
Maximum operating pressure	1 MPa
Proof pressure	2.0 MPa
Maximum ambient temperature	60 °C
Minimum ambient temperature	-20 °C

Specifications are subject to change without prior notice and any obligation on the part of the manufacturer.

SMC CORPORATION Zuazobidea 14, 01012, Vitoria-Gasteiz, Álava +34 945184100 +34 945184126 www.smc.eu support.marketingeurope@smc.com

Conform to the European RoHS Directive	Conform
Enclosure	IP67 (IP65 for the DIN terminal)
Allowable voltage fluctuation	±10% of rated voltage
Allowable leakage voltage	2 % or less of the rated voltage
Power consumption	8 W
Temperature rise	65 °C
Valve Leakage	Air: 1 cm^3/min, Water and Oil: 0.1 cm^3/min
Weight	0.715 Kg

Specifications are subject to change without prior notice and any obligation on the part of the manufacturer.

SMC CORPORATION Zuazobidea 14, 01012, Vitoria-Gasteiz, Álava +34 945184100 +34 945184126 www.smc.eu support.marketingeurope@smc.com

Dimensions

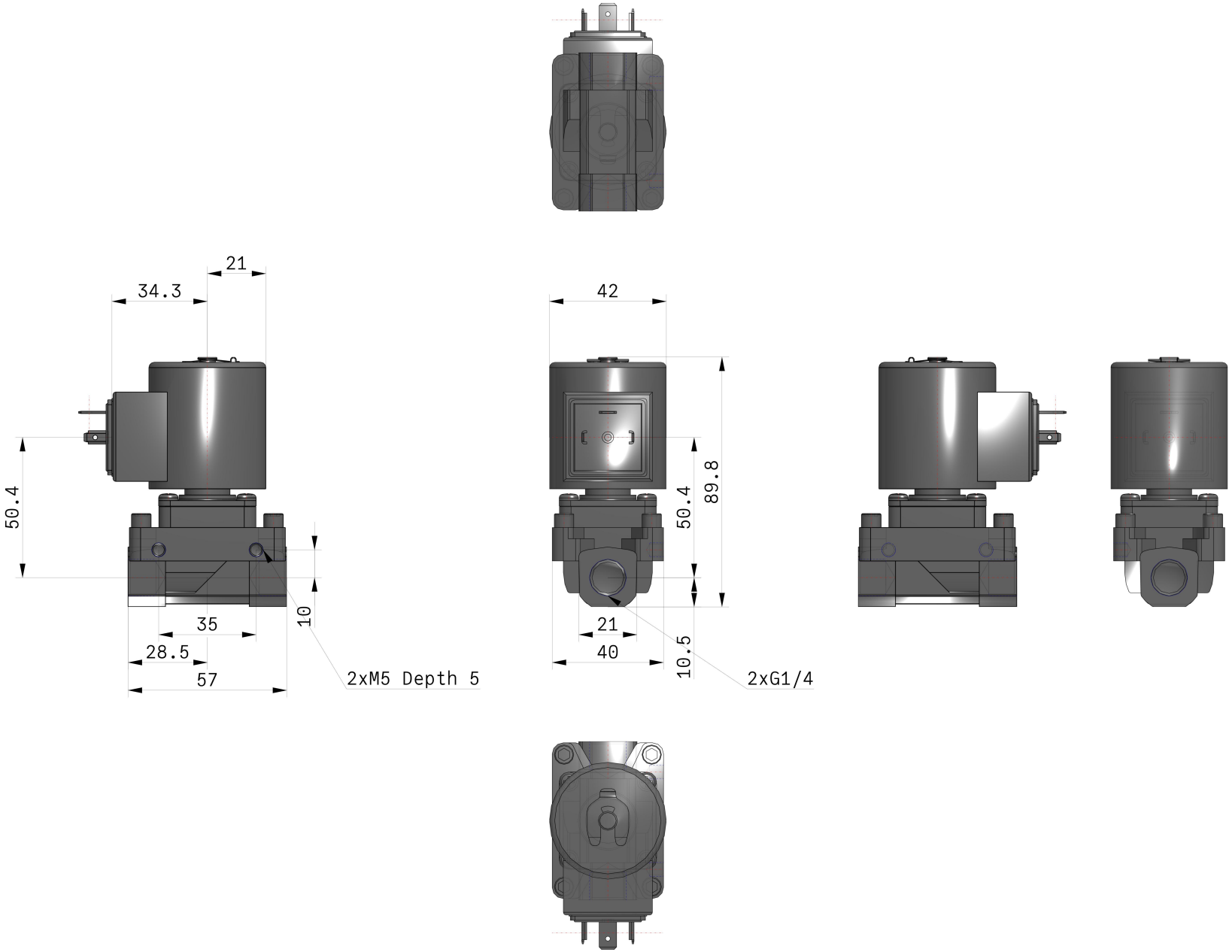

Specifications are subject to change without prior notice and any obligation on the part of the manufacturer.

SMC CORPORATION Zuazobidea 14, 01012, Vitoria-Gasteiz, Álava +34 945184100 +34 945184126 www.smc.eu support.marketingeurope@smc.com

Constructions

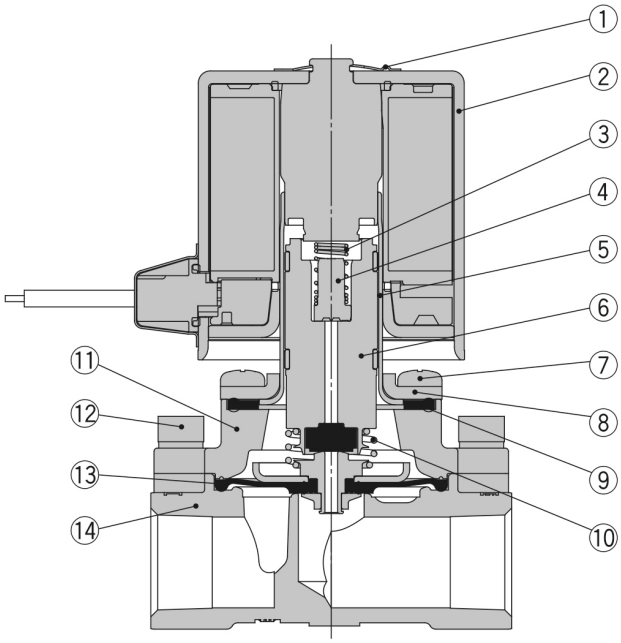

Component Parts

No.	Description	Material		
			Brass	Stainless
1	**Clip**	Stainless steel		
2	**Solenoid coil**	Stainless steel, Cu, Resin		
3	**Spring**	Stainless steel		
4	**Stopper**	PPS		
5	**Tube assembly**	Stainless steel		
6	**Armature assembly**	Stainless steel, PPS, NBR (FKM, EPDM)		
7	**Mounting screw**	Fe		
8	**Bonnet**	Stainless steel		
9	**Gasket**	NBR (FKM, EPDM)		
10	**Lift spring**	Stainless steel		
11	**Bonnet**	Aluminium	Brass	Stainless
12	**Bolt**	Fe		
13	**Diaphragm assembly**	Stainless steel, NBR (FKM, EPDM)		
14	**Body**	Aluminium	Brass	Stainless

*1 Size 30 only

Specifications are subject to change without prior notice and any obligation on the part of the manufacturer.

SMC CORPORATION Zuazobidea 14, 01012, Vitoria-Gasteiz, Álava +34 945184100 +34 945184126 www.smc.eu support.marketingeurope@smc.com

Additional information

Catalogue	JSX-JSX-E_EU.pdf
Declaration of conformity	newDoC_JSXZ_TF122130EN.pdf newDoC_JSXZ_TF125-548EN.pdf
Installation manuals	IM_JSXZ_TF222-050EN-A.pdf
Operation manuals	OM_JSXZ_DOC1158126EN.pdf

Specifications are subject to change without prior notice and any obligation on the part of the manufacturer.

SMC CORPORATION Zuazobidea 14, 01012, Vitoria-Gasteiz, Álava +34 945184100 +34 945184126 www.smc.eu support.marketingeurope@smc.com