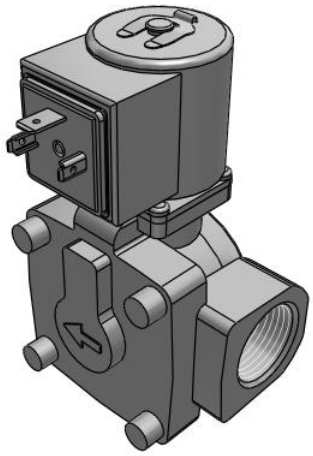

# JSXD, Pilot Operated 2-Port Solenoid Valve, N.C.

## JSXD51-CN06F-5DN

Datasheet

## General series information

- Direct /Pilot Operated 2-Port Solenoid Valve
- Applicable fluid: air, water, steam, heated water, vacuum or oil
- Flow rate up to 700 l/min (water)
- Orifice diameter: 1.6 to 50 mm
- Port size: 1/8" to 2"
- Body material: stainless steel, brass, bronze and aluminium
- Coil material: stainless steel
- Enclosure: IP67.

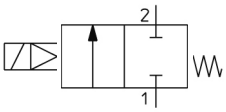


*Directional control valve 2/2-way valve, closed normal position With a combinationed control by solenoid and pilot valve control Return with mechanical control spring*

## Standard specifications

| | |
|---|---|
| Size | 5 (50) |
| Valve Type | 1 (Normally Closed) |
| Body Material | C (Brass) |
| Seal Material | N (NBR) |
| Port Size | 06 (3/4) |
| Thread Type | F (G) |
| Rated voltage | 5 (24 VDC) |
| Electrical Entry | DN (without DIN Connector, w/Surge Voltage Suppressor) |
| Oil-free Option | None |
| Bracket | None |
| Maximum temperature of pressure medium | 60 °C |
| Minimum temperature of pressure medium | Air: -10 °C, Water: 1 °C, Oil: -5 °C |
| Maximum operating pressure | 1 MPa |
| Maximum ambient temperature | 60 °C |
| Minimum ambient temperature | -20 °C |

Specifications are subject to change without prior notice and any obligation on the part of the manufacturer.



SMC CORPORATION Zuazobidea 14, 01012, Vitoria-Gasteiz, Álava +34 945184100 +34 945184126 www.smc.eu support.marketingeurope@smc.com

| | |
|---|---|
| Conform to the European RoHS Directive | Conform |
| Enclosure | IP67 (IP65 for the DIN terminal) |
| Technical graph 1 | 1001B_graph1.1_en.jpg;1001B_graph1.2_en.jpg |
| Graph1 title | Flow Rate Characteristics |
| Allowable voltage fluctuation | ±10% of rated voltage |
| Allowable leakage voltage | 2 % or less of the rated voltage |
| Power consumption | 6 W |
| Temperature rise | 65 °C |
| Valve Leakage | Air: 2 cm³/min, Water and oil: 0.2 cm³/min |
| External Leakage | Air: 1 cm³/min, Water and oil: 0.1 cm³/min |
| Weight | 0.895 Kg |

# Technical information graphs

## Flow Rate Characteristics

**For Air (Orifice diameter: Ø 10 mm, Ø 15 mm, Ø 20 mm, Ø 25 mm)**

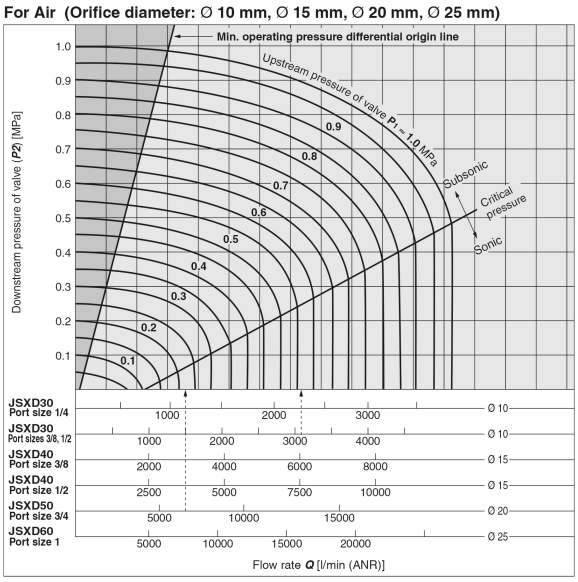


**For Water**

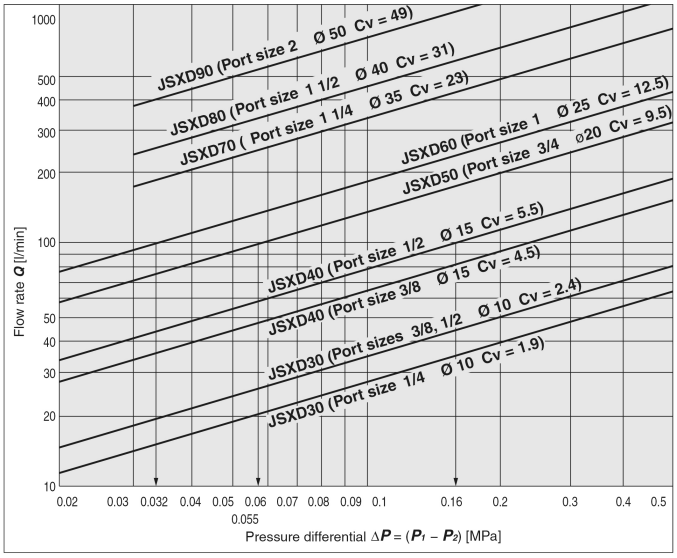


Specifications are subject to change without prior notice and any obligation on the part of the manufacturer.



SMC CORPORATION Zuazobidea 14, 01012, Vitoria-Gasteiz, Álava +34 945184100 +34 945184126 www.smc.eu support.marketingeurope@smc.com

# Dimensions

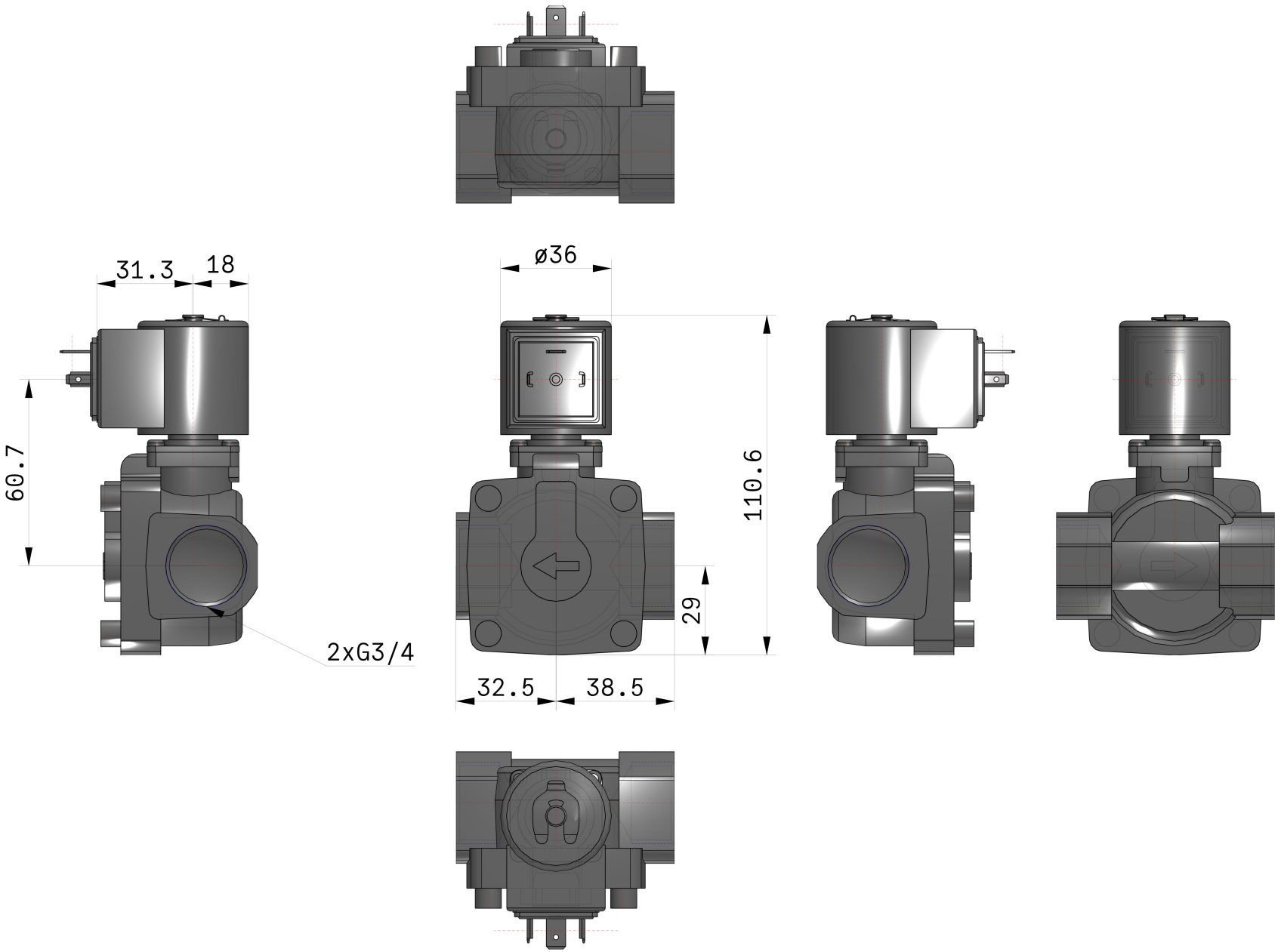


Specifications are subject to change without prior notice and any obligation on the part of the manufacturer.



SMC CORPORATION Zuazobidea 14, 01012, Vitoria-Gasteiz, Álava +34 945184100 +34 945184126 www.smc.eu support.marketingeurope@smc.com

## Constructions

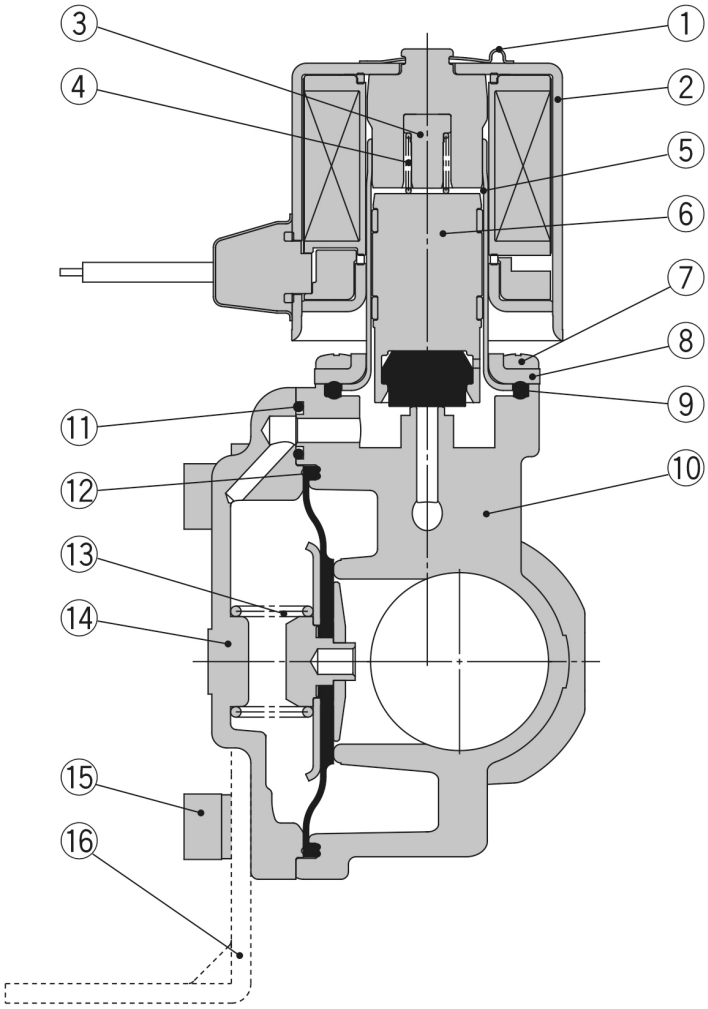


### Component Parts

| No. | Description | Material | |
|---|---|---|---|
| | | Brass | Stainless steel |
| 1 | **Clip** | Stainless steel | |
| 2 | **Solenoid coil** | Stainless steel, Cu, Resin | |
| 3 | **Stopper** | PPS | |
| 4 | **Spring** | Stainless steel | |
| 5 | **Tube assembly** | Stainless steel | |
| 6 | **Armature assembly** | Stainless steel, PPS, NBR, (FKM, EPDM) | |
| 7 | **Mounting screw** | Fe | |
| 8 | **Bonnet** | Stainless steel | |
| 9 | **Gasket** | NBR, (FKM, EPDM) | |
| 10 | **Body** | Brass | Stainless steel |
| 11 | **O-ring** | NBR, (FKM, EPDM) | |
| 12 | **Diaphragm assembly** | Stainless steel, NBR, (FKM, EPDM) | |
| 13 | **Valve spring** | Stainless steel | |
| 14 | **Bonnet** | Brass | Stainless steel |
| 15 | **Bolt** | Fe | |
| 16 | **Bracket** | Fe | |

*Specifications are subject to change without prior notice and any obligation on the part of the manufacturer.*



**SMC CORPORATION** Zuazobidea 14, 01012, Vitoria-Gasteiz, Álava +34 945184100 +34 945184126 www.smc.eu support.marketingeurope@smc.com

# Additional information

| | |
|---|---|
| Catalogue | JSX-JSX-E_EU.pdf |
| Declaration of conformity | newDoC_JSXD_TF1Z311EN.pdf<br>newDoC_JSXD_TF125-544EN.pdf |
| Installation manuals | IM_JSXD_TF2Y015EN-B.pdf |
| Operation manuals | OM_JSXD_DOC1029458EN-2.pdf |

Specifications are subject to change without prior notice and any obligation on the part of the manufacturer.



SMC CORPORATION Zuazobidea 14, 01012, Vitoria-Gasteiz, Álava +34 945184100 +34 945184126 www.smc.eu support.marketingeurope@smc.com