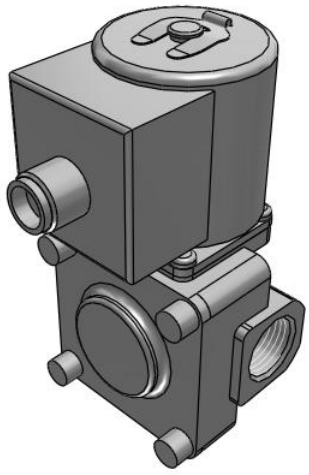

JSXD, Pilot Operated 2-Port Solenoid Valve, N.C.

JSXD31-CN03F-5WN

Datasheet

General series information

- Applicable fluid: air, water, oil
- Flow rate up to 2200 l/min (water)
- Orifice diameter: 10 to 50 mm
- Port size: 1/4” to 2”
- Body material: stainless steel, brass, bronze and aluminium
- Coil material: stainless steel
- Enclosure: IP67.

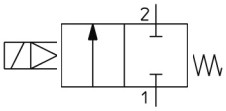

Directional control valve 2/2-way valve, closed normal position With a combinationed control by solenoid and pilot valve control Return with mechanical control spring

Standard specifications

Size	3 (30)
Valve Type	1 (Normally Closed)
Body Material	C (Brass)
Seal Material	N (NBR)
Port Size	03 (3/8)
Thread Type	F (G)
Rated voltage	5 (24 VDC)
Electrical Entry	WN (M12 Connector/without Connector Cable with Surge Voltage Suppressor)
Oil-free Option	None
Bracket	None
Maximum temperature of pressure medium	60 °C
Minimum temperature of pressure medium	Air: -10 °C, Water: 1 °C, Oil: -5 °C
Maximum operating pressure	1 MPa
Maximum ambient temperature	60 °C
Minimum ambient temperature	-20 °C

Specifications are subject to change without prior notice and any obligation on the part of the manufacturer.

SMC CORPORATION Zuazobidea 14, 01012, Vitoria-Gasteiz, Álava +34 945184100 +34 945184126 www.smc.eu emcmarketing@smc.smces.es

Conform to the European RoHS Directive	Conform
Enclosure	IP67 (IP65 for the DIN terminal)
Technical graph 1	1001B_graph1.1_en.jpg;1001B_graph1.2_en.jpg
Graph1 title	Flow Rate Characteristics
Allowable voltage fluctuation	±10% of rated voltage
Allowable leakage voltage	2 % or less of the rated voltage
Power consumption	8 W
Temperature rise	65 °C
Valve Leakage	Air: 2 cm³/min, Water and oil: 0.2 cm³/min
External Leakage	Air: 1 cm³/min, Water and oil: 0.1 cm³/min
Weight	0.515 Kg

Technical information graphs

Flow Rate Characteristics

For Air (Orifice diameter: Ø 10 mm, Ø 15 mm, Ø 20 mm, Ø 25 mm)

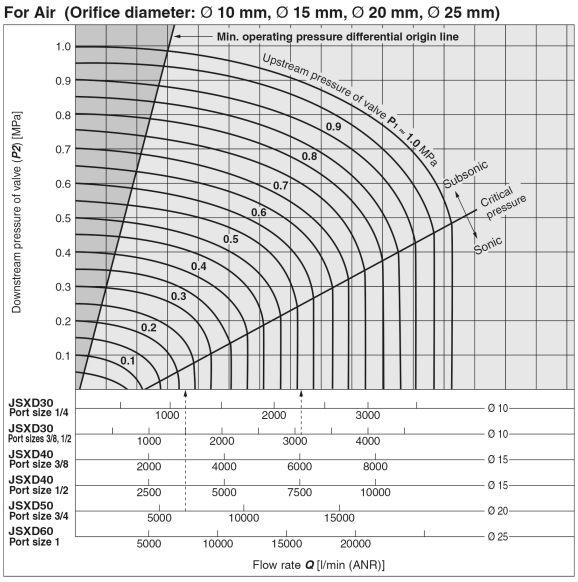

For Water

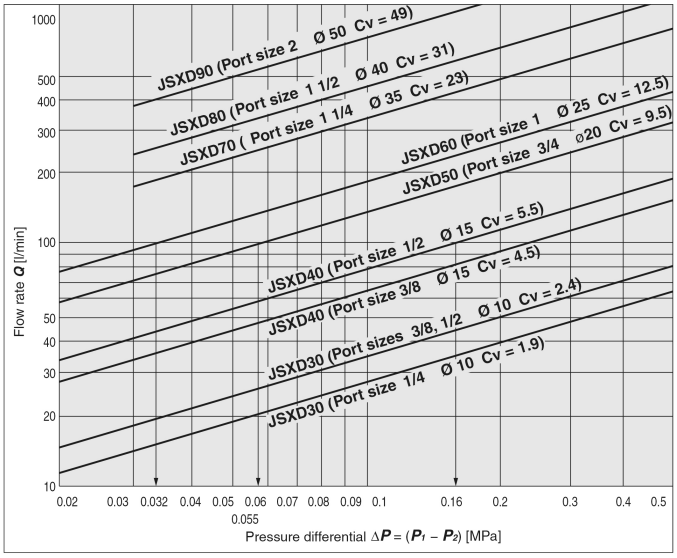

Specifications are subject to change without prior notice and any obligation on the part of the manufacturer.

SMC CORPORATION Zuazobidea 14, 01012, Vitoria-Gasteiz, Álava +34 945184100 +34 945184126 www.smc.eu emcmarketing@smc.smces.es

Dimensions

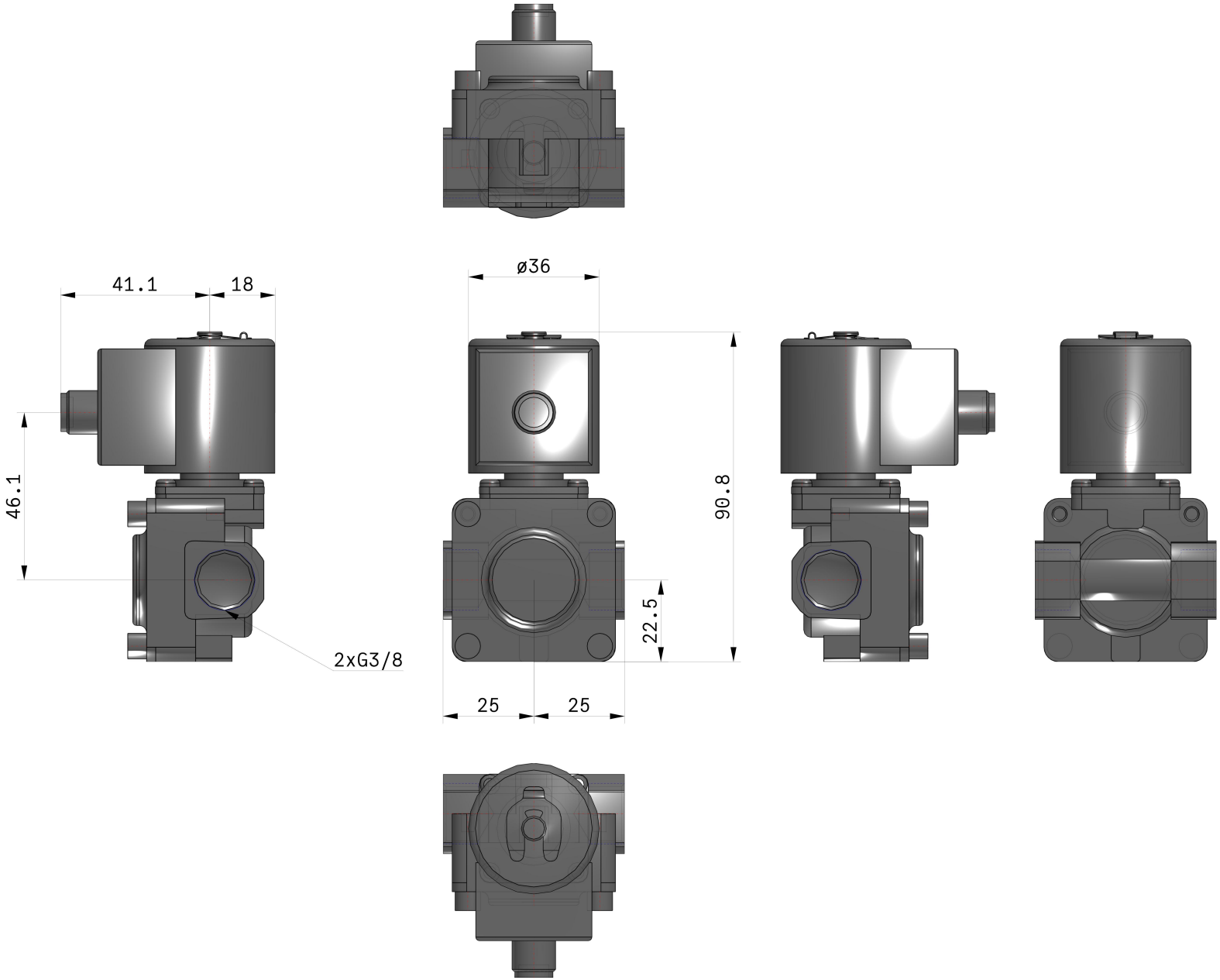

Specifications are subject to change without prior notice and any obligation on the part of the manufacturer.

SMC CORPORATION Zuazobidea 14, 01012, Vitoria-Gasteiz, Álava +34 945184100 +34 945184126 www.smc.eu emcmarketing@smc.smces.es

Constructions

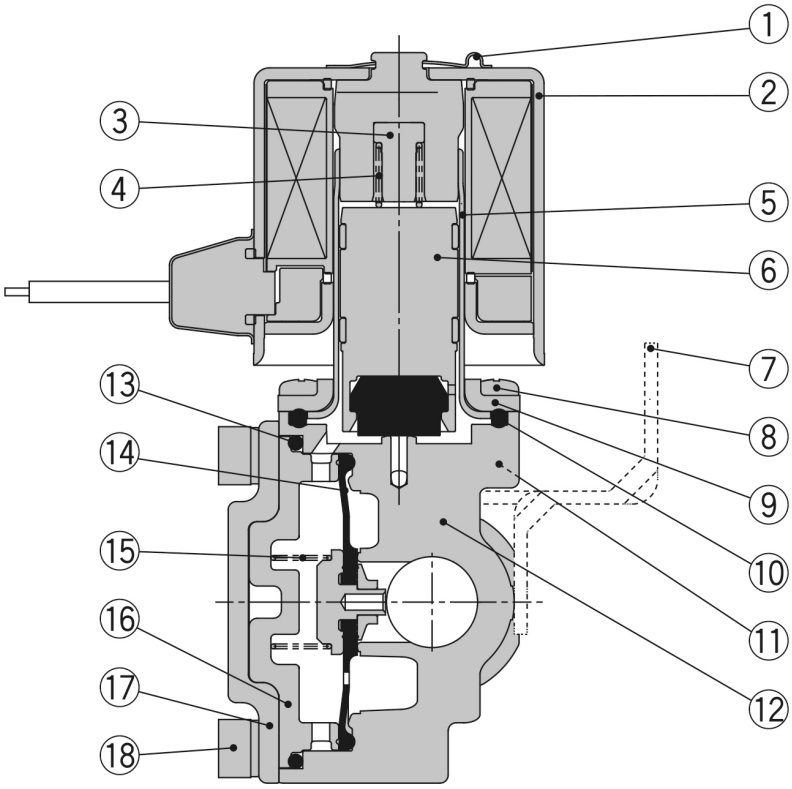

Component Parts

No.	Description	Material		
		Brass	Stainless	Aluminium
1	**Clip**	Stainless steel		
2	**Solenoid coil**	Stainless steel, Cu, Resin		
3	**Stopper**	PPS		
4	**Spring**	Stainless steel		
5	**Tube assembly**	Stainless steel		
6	**Armature assembly**	Stainless steel, PPS, NBR, (FKM, EPDM)		Stainless steel, PPS, NBR, (FKM)
7	**Bracket**	Fe		
8	**Mounting screw**	Fe		
9	**Bonnet**	Stainless steel		
10	**Gasket**	NBR, (FKM, EPDM)		NBR, (FKM)
11	**Bolt**	Fe		
12	**Body**	Brass	Stainless	Aluminium
13	**O-ring**	NBR, (FKM, EPDM)		NBR, (FKM)
14	**Diaphragm assembly**	Stainless steel, NBR, (FKM,		Stainless steel, NBR,
15	**Valve spring**	Stainless steel		
16	**Buffer**	PPS		
17	**Bonnet**	Stainless steel		
18	**Bolt**	Fe		

Specifications are subject to change without prior notice and any obligation on the part of the manufacturer.

SMC CORPORATION Zuazobidea 14, 01012, Vitoria-Gasteiz, Álava +34 945184100 +34 945184126 www.smc.eu emcmarketing@smc.smces.es

Additional information

Catalogue	JSX-Da_EU.pdf
Declaration of conformity	newDoC_JSXD_TF1Z311EN.pdf
Installation manuals	IM_JSXD_TF2Y015EN-B.pdf
Operation manuals	OM_JSXD_DOC1029458EN-1.pdf

Specifications are subject to change without prior notice and any obligation on the part of the manufacturer.

SMC CORPORATION Zuazobidea 14, 01012, Vitoria-Gasteiz, Álava +34 945184100 +34 945184126 www.smc.eu emcmarketing@smc.smces.es