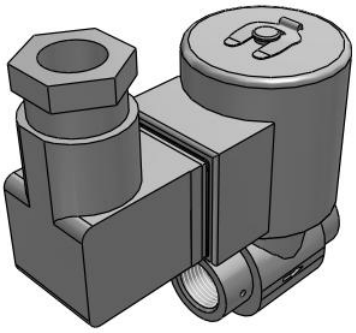

JSX, Direct Operated 2-Port Solenoid Valve

JSX31-SF703F-5DS

Datasheet

General series information

- Applicable fluid: air, water, oil
- Flow rate up to 25 l/min (water)
- Orifice diameter: 1.6 to 7.1 mm
- Port size: 1/8” to 3/8”
- Body material: stainless steel, brass and aluminium
- Coil material: stainless steel
- Enclosure: IP67.

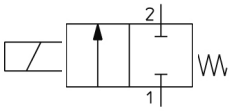

Directional control valve 2/2-way valve, closed normal position Controlled by solenoid coil with one winding, direction of actuation towards the valving element Return with mechanical control spring

Standard specifications

Size	3 (Series 30)
Body Material	S (Stainless Steel)
Seal Material	F (FKM)
Orifice Diameter/Port Size	703 (Orifice Diameter: ø7.1 mm; Port Size: 3/8)
Thread Type	F (G)
Rated voltage	5 (24 VDC)
Electrical Entry	DS (DIN Terminal, w/Surge Voltage Suppressor)
Oil-free Option	None
Bracket	None
Maximum temperature of pressure medium	60 °C
Minimum temperature of pressure medium	Air: -10 °C, Water: 1 °C, Oil: -5 °C
Maximum operating pressure	1 MPa
Proof pressure	2.0 MPa
Maximum ambient temperature	60 °C
Minimum ambient temperature	-20 °C
Conform to the European RoHS Directive	Conform

Specifications are subject to change without prior notice and any obligation on the part of the manufacturer.

SMC CORPORATION Zuazobidea 14, 01012, Vitoria-Gasteiz, Álava +34 945184100 +34 945184126 www.smc.eu emcmarketing@smc.smces.es

Enclosure	IP67 (IP65 for the DIN terminal)
Allowable voltage fluctuation	±10% of rated voltage
Allowable leakage voltage	2 % or less of the rated voltage
Power consumption	8 W
Temperature rise	65 °C
External Leakage	Air: 1 cm^3/min, Water and Oil: 0.1 cm^3/min
Weight	0.530 Kg

Specifications are subject to change without prior notice and any obligation on the part of the manufacturer.

SMC CORPORATION Zuazobidea 14, 01012, Vitoria-Gasteiz, Álava +34 945184100 +34 945184126 www.smc.eu emcmarketing@smc.smces.es

Dimensions

Note: The "DIN terminal connector direction" in this CAD data will not be reflected in the actual product that will be shipped.
After the product is delivered, please adjust the orientation of the connector as necessary.

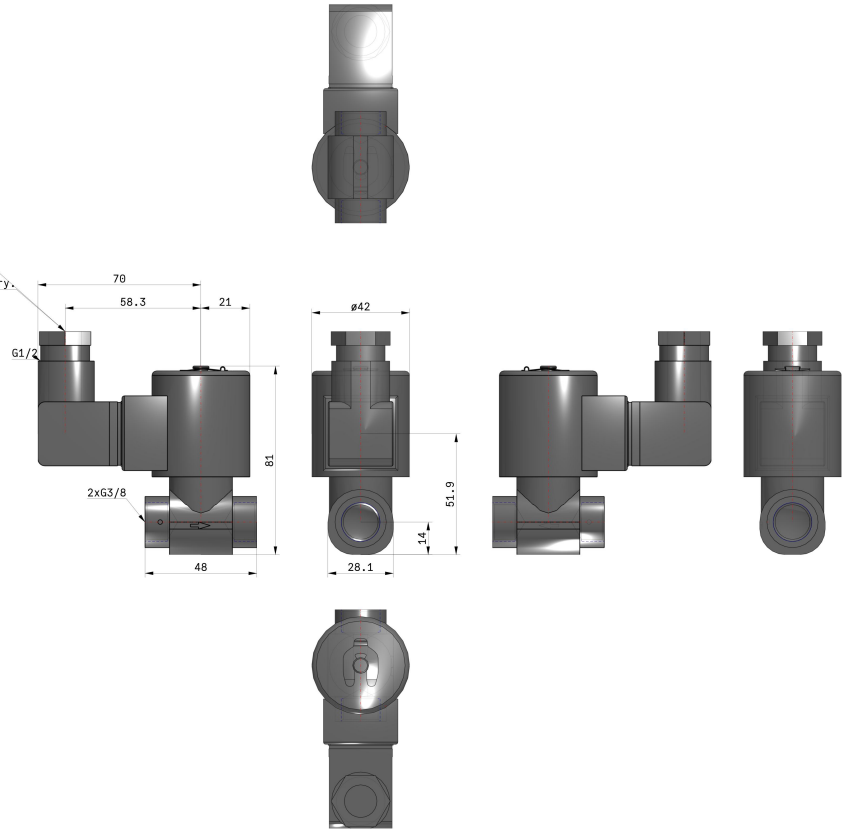

Specifications are subject to change without prior notice and any obligation on the part of the manufacturer.

SMC CORPORATION Zuazobidea 14, 01012, Vitoria-Gasteiz, Álava +34 945184100 +34 945184126 www.smc.eu emcmarketing@smc.smces.es

Constructions

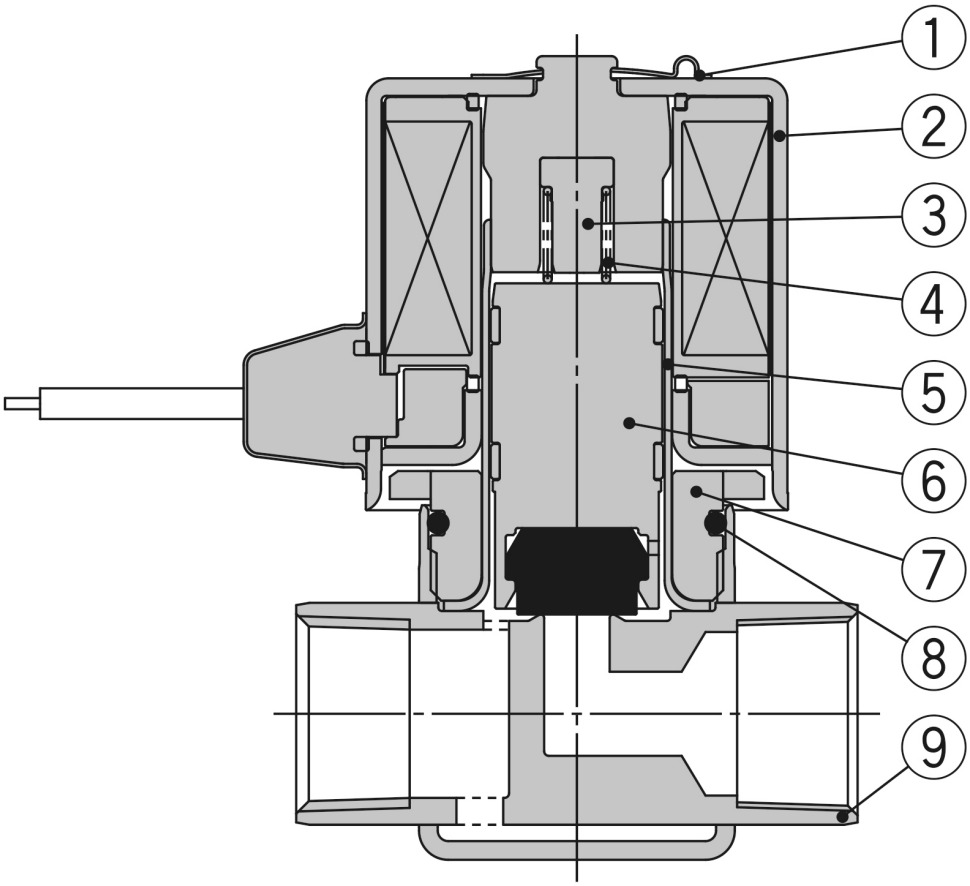

Component Parts

No.	Description	Material
1	**Clip**	Stainless steel
2	**Solenoid coil**	Stainless steel, Cu,
3	**Stopper**	PPS
4	**Spring**	Stainless steel
5	**Tube assembly**	Stainless steel
6	**Armature assembly**	Stainless steel, PPS, NBR (FKM, EPDM)
7	**Nut**	Stainless steel
8	**Gasket**	NBR (FKM,
9	**Body**	Stainless steel

Specifications are subject to change without prior notice and any obligation on the part of the manufacturer.

SMC CORPORATION Zuazobidea 14, 01012, Vitoria-Gasteiz, Álava +34 945184100 +34 945184126 www.smc.eu emcmarketing@smc.smces.es

Additional information

Catalogue	JSX-Da_EU.pdf
Declaration of conformity	newDoC_JSX_TF1Z310EN.pdf
Installation manuals	IM_JSX_TF2Y014EN-C.pdf

Specifications are subject to change without prior notice and any obligation on the part of the manufacturer.

SMC CORPORATION Zuazobidea 14, 01012, Vitoria-Gasteiz, Álava +34 945184100 +34 945184126 www.smc.eu emcmarketing@smc.smces.es