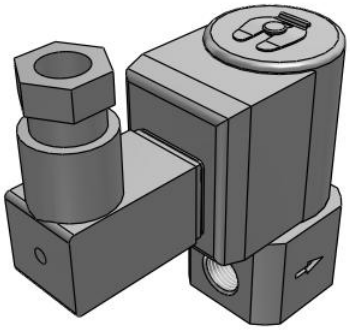

JSX, Direct Operated 2-Port Solenoid Valve

JSX11-CN201F-JDS

Datasheet

General series information

- Applicable fluid: air, water, oil
- Flow rate up to 25 l/min (water)
- Orifice diameter: 1.6 to 7.1 mm
- Port size: 1/8” to 3/8”
- Body material: stainless steel, brass and aluminium
- Coil material: stainless steel
- Enclosure: IP67.

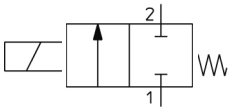

Directional control valve 2/2-way valve, closed normal position Controlled by solenoid coil with one winding, direction of actuation towards the valving element Return with mechanical control spring

Standard specifications

Size	1 (Series 10)
Body Material	C (Brass)
Seal Material	N (NBR)
Orifice Diameter/Port Size	201 (Orifice Diameter: ø2.4 mm; Port Size: 1/8)
Thread Type	F (G)
Rated voltage	J (230 VAC)
Electrical Entry	DS (DIN Terminal, w/Surge Voltage Suppressor)
Oil-free Option	None
Bracket	None
Maximum temperature of pressure medium	60 °C
Minimum temperature of pressure medium	Air: -10 °C, Water: 1 °C, Oil: -5 °C
Maximum operating pressure	1 MPa
Proof pressure	2.0 MPa
Maximum ambient temperature	60 °C
Minimum ambient temperature	-20 °C
Conform to the European RoHS Directive	Conform

Specifications are subject to change without prior notice and any obligation on the part of the manufacturer.

SMC CORPORATION Zuazobidea 14, 01012, Vitoria-Gasteiz, Álava +34 945184100 +34 945184126 www.smc.eu emcmarketing@smc.smces.es

Enclosure	IP67 (IP65 for the DIN terminal)
Allowable voltage fluctuation	±10% of rated voltage
Allowable leakage voltage	5 % or less of the rated voltage
Apparent power	4.5 VA
Temperature rise	70 °C
External Leakage	Air: 1 cm^3/min, Water and Oil: 0.1 cm^3/min

Specifications are subject to change without prior notice and any obligation on the part of the manufacturer.

SMC CORPORATION Zuazobidea 14, 01012, Vitoria-Gasteiz, Álava +34 945184100 +34 945184126 www.smc.eu emcmarketing@smc.smces.es

Dimensions

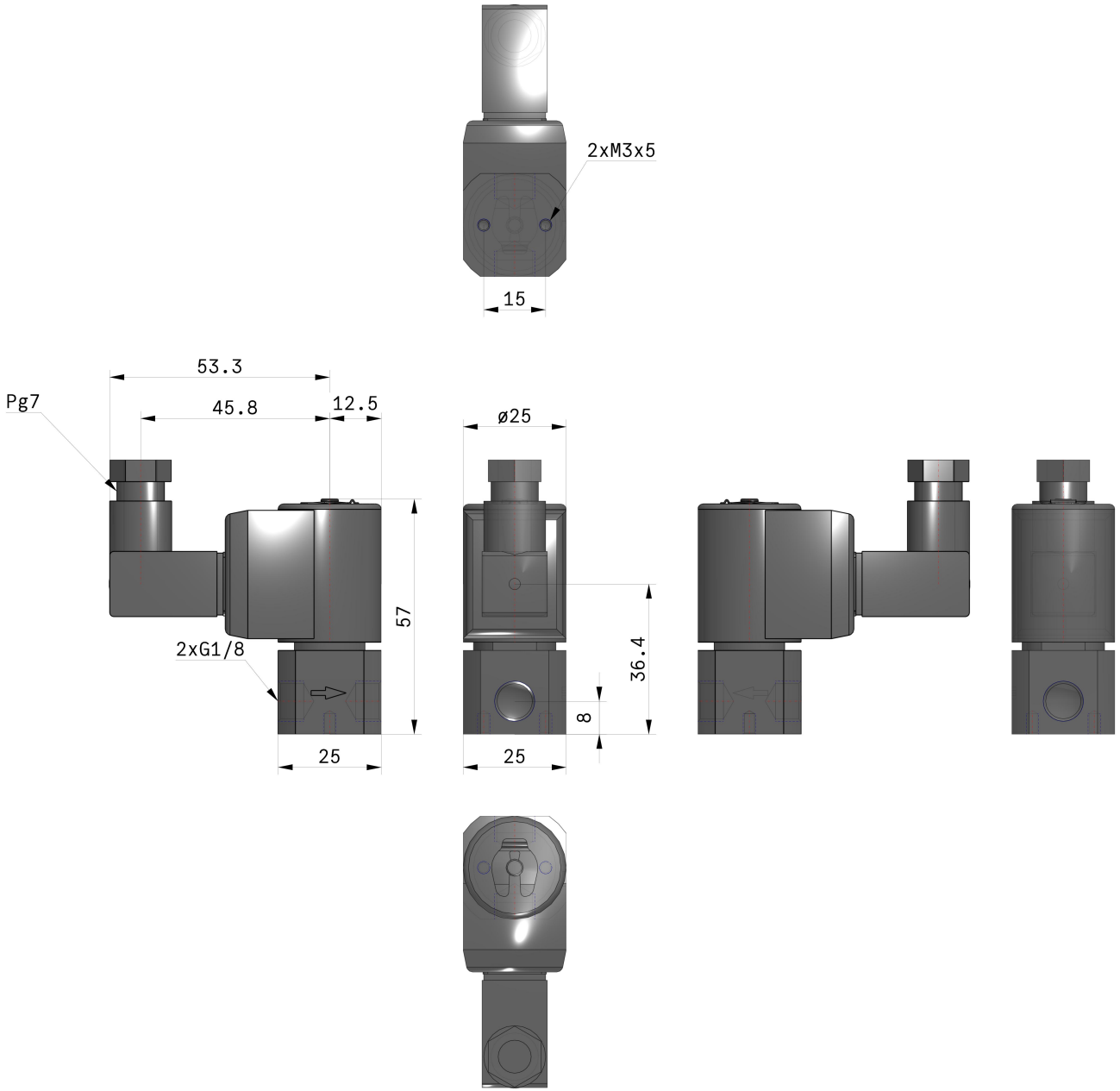

Specifications are subject to change without prior notice and any obligation on the part of the manufacturer.

SMC CORPORATION Zuazobidea 14, 01012, Vitoria-Gasteiz, Álava +34 945184100 +34 945184126 www.smc.eu emcmarketing@smc.smces.es

Constructions

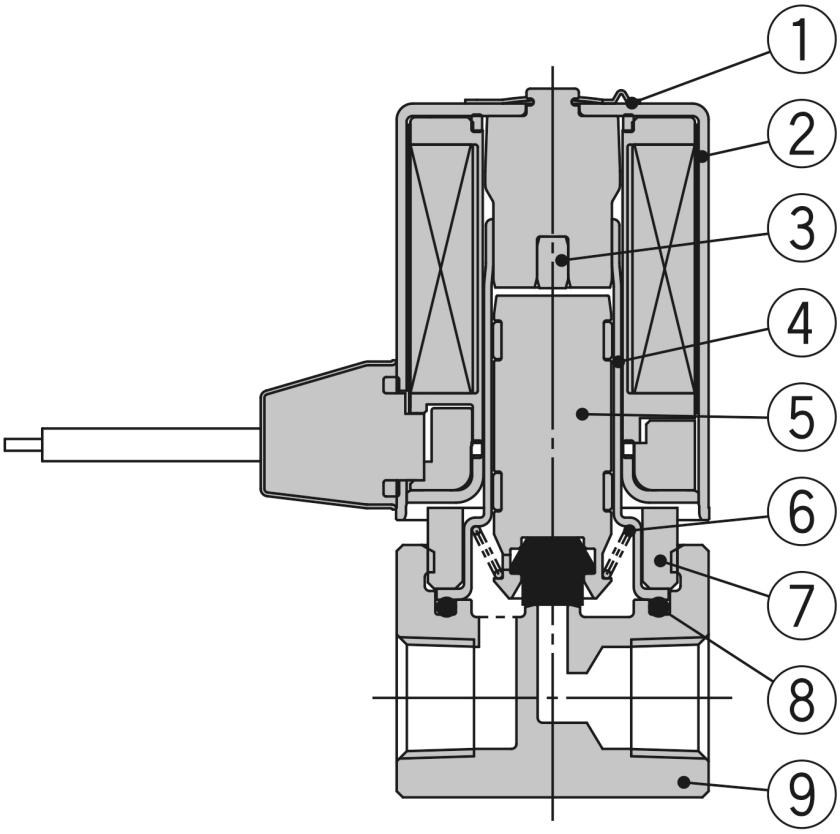

Component Parts

No.	Description	Material	
1	**Clip**	Stainless steel	
2	**Solenoid coil**	Stainless steel, Cu,	
3	**Stopper**	PPS	
4	**Tube assembly**	Stainless steel	
5	**Armature assembly**	Stainless steel, PPS, NBR (FKM, EPDM)	
6	**Spring**	Stainless steel	
7	**Set nut**	Stainless steel	
8	**Gasket**	NBR, (FKM, EPDM)	
9	**Body**	Stainless	Brass

Specifications are subject to change without prior notice and any obligation on the part of the manufacturer.

SMC CORPORATION Zuazobidea 14, 01012, Vitoria-Gasteiz, Álava +34 945184100 +34 945184126 www.smc.eu emcmarketing@smc.smces.es

Additional information

Catalogue	JSX-Da_EU.pdf
Declaration of conformity	newDoC_JSX_TF1Z310EN.pdf
Installation manuals	IM_JSX_TF2Y014EN-C.pdf

Specifications are subject to change without prior notice and any obligation on the part of the manufacturer.

SMC CORPORATION Zuazobidea 14, 01012, Vitoria-Gasteiz, Álava +34 945184100 +34 945184126 www.smc.eu emcmarketing@smc.smces.es