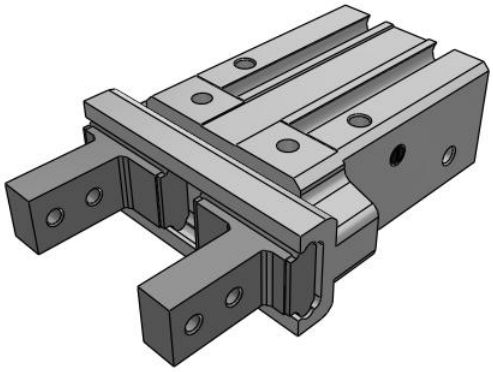

Standard - JMHZ2
JMHZ2-12C

Datasheet

General series information

- Bore sizes (mm): 8, 12, 16, 20
- Single/double-acting
- Repeatability: ±0.01 mm
- Compact auto switches can be mounted directly.

Gripper, normally closed, single-acting with permanent magnet on piston

Standard specifications

Bore Size	12 (12 mm)
Action	C (Single Acting, Normally Closed)
Finger Option	Basic
Auto Switch	No Switch
Lead Wire or Prewired Connector	0.5m (Or None in the Case of No Switch)
Number	2 pcs. (Or None in the Case of No Switch)
Made to Order	None
Maximum operating pressure	0.7 MPa
Minimum operating pressure	0,3 MPa
Maximum ambient temperature with magnet	60 ºC
Minimum ambient temperature	-10 ºC (No freezing)
Conform to the European RoHS Directive	Conform
Repeatability	± 0.01 mm
Lubrication	Non-Lube
Effective holding force per finger, external (0.5 MPa)	-
Effective holding force per finger, internal (0.5 MPa)	19,3 N
Maximum operating frequency	120 c.p.m
Opening / closing stroke (both sides)	4 mm
Fluid	Air

Specifications are subject to change without prior notice and any obligation on the part of the manufacturer.

SMC CORPORATION Zuazobidea 14, 01012, Vitoria-Gasteiz, Álava +34 945184100 +34 945184126 www.smc.eu emcmarketing@smc.smces.es

Stroke per gripper jaw	2 mm
Weight	0.072 Kg

Specifications are subject to change without prior notice and any obligation on the part of the manufacturer.

SMC CORPORATION Zuazobidea 14, 01012, Vitoria-Gasteiz, Álava +34 945184100 +34 945184126 www.smc.eu emcmarketing@smc.smces.es

Dimensions

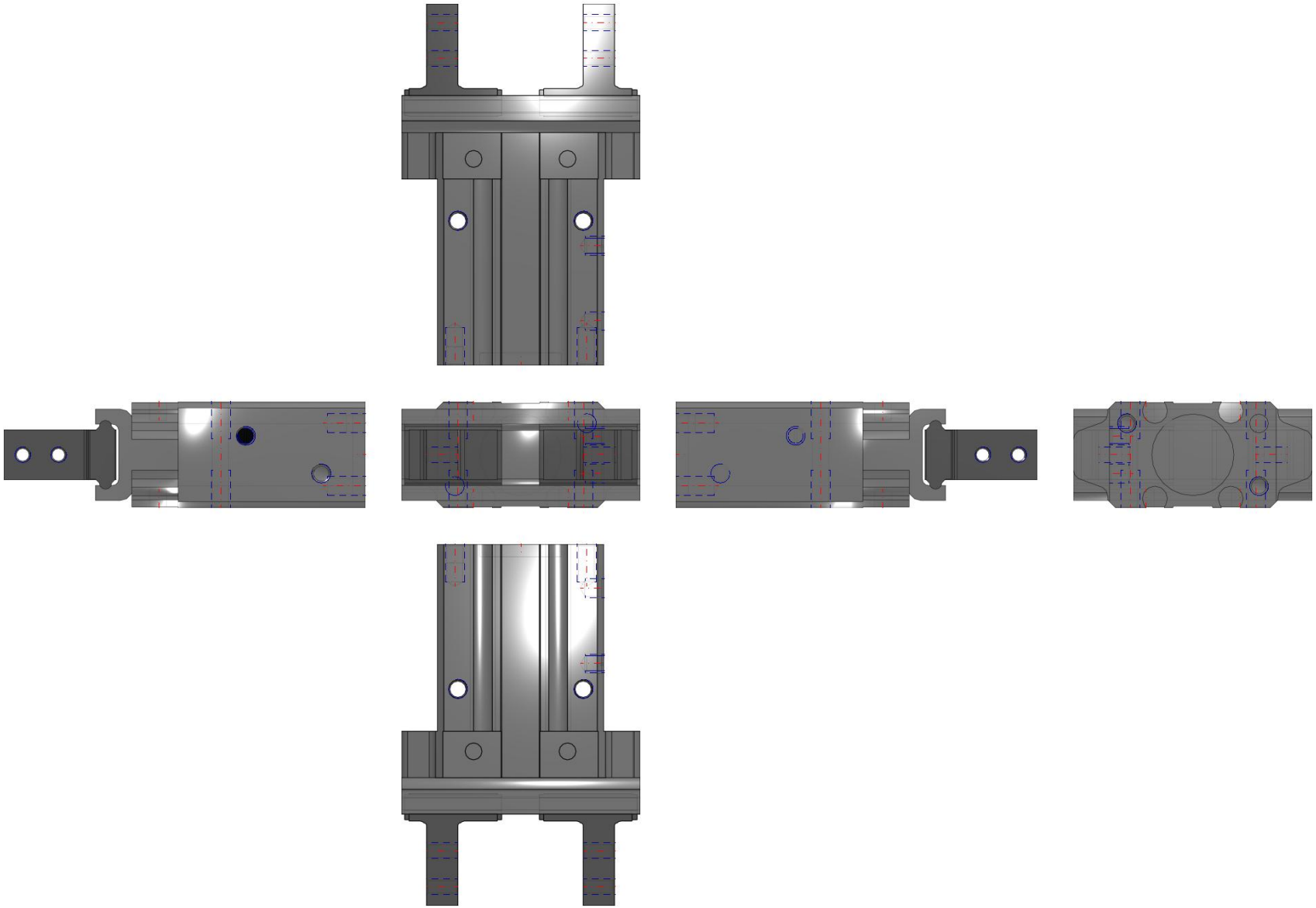

Specifications are subject to change without prior notice and any obligation on the part of the manufacturer.

SMC CORPORATION Zuazobidea 14, 01012, Vitoria-Gasteiz, Álava +34 945184100 +34 945184126 www.smc.eu emcmarketing@smc.smces.es

Constructions

Single acting, Normally closed

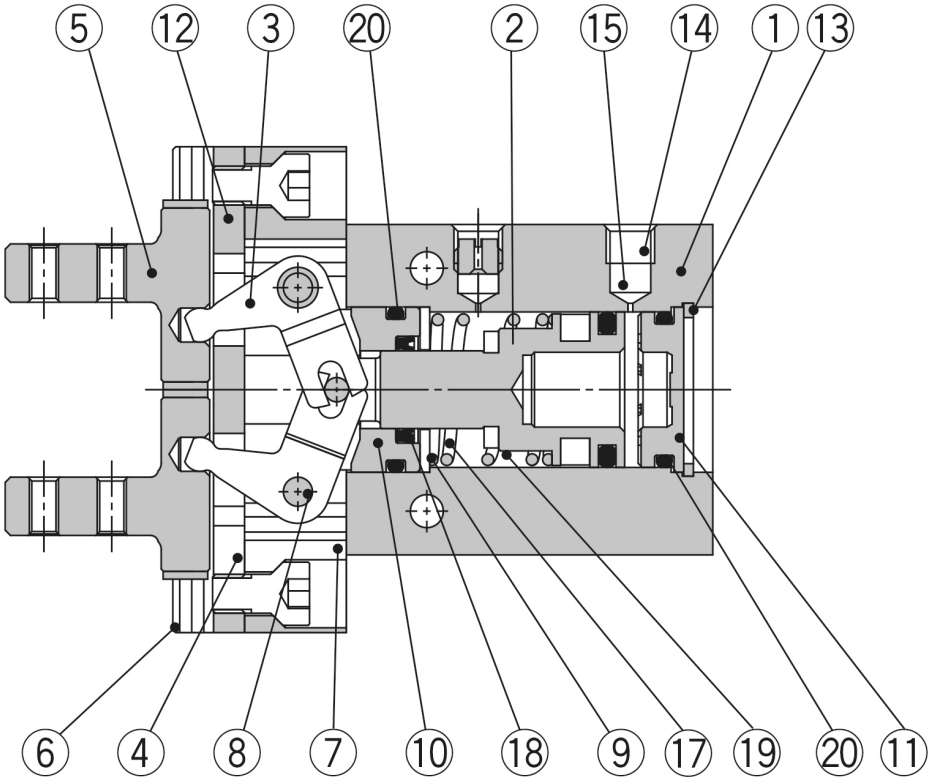

Component Parts

No.	Description
1	Body A
2	Piston assembly
3	Lever
4	Guide
5	Finger
6	Roller stopper
7	Body B
8	Lever shaft
9	Seal support
10	Rod cover

No.	Description
11	Cap
12	Steel ball
13	Type C retaining ring for hole
14	Exhaust plug A
15	Exhaust filter A
17	N.C. spring
18	Rod seal
19	Piston seal
20	Gasket

Specifications are subject to change without prior notice and any obligation on the part of the manufacturer.

SMC CORPORATION Zuazobidea 14, 01012, Vitoria-Gasteiz, Álava +34 945184100 +34 945184126 www.smc.eu emcmarketing@smc.smces.es

Additional information

Catalogue	JMHZ2-B_EU.pdf
Operation manuals	OM_JMHZ2_OMX0002EN.pdf

Specifications are subject to change without prior notice and any obligation on the part of the manufacturer.

SMC CORPORATION Zuazobidea 14, 01012, Vitoria-Gasteiz, Álava +34 945184100 +34 945184126 www.smc.eu emcmarketing@smc.smces.es