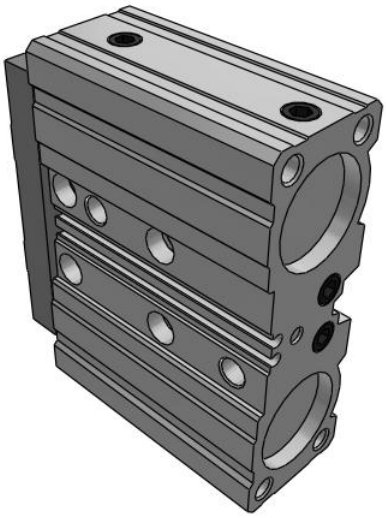

JMGP, Dual Rod Cylinder
JMGPM40TF-50

Datasheet

General series information

- Dual rod cylinder with slide bearing.
- Compact and Lightweight.
- Bore sizes (mm): 12 ~ 100.
- Strokes up to 200 mm.
- Bumper cushion.
- Piping is possible in 4 directions.
- 3 mounting options.

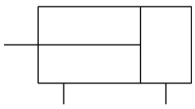

Double-acting, single-rod cylinder

Standard specifications

Bore Size	40 (32 mm x 2)
Stroke	50 mm
Number	2 pcs. (Or None in Case of No Switch)
Port Thread	TF (G)
Lead Wire or Pre-wired Connector	0.5 m (Or None in the Case of No Switch)
Auto Switch	No Switch
Pressure medium	Air
Maximum temperature of pressure medium	60 ºC
Minimum temperature of pressure medium	5 ºC
Maximum operating pressure	0.7 MPa
Minimum operating pressure	0.15 MPa
Proof pressure	1.05 MPa
Maximum ambient temperature	60 ºC
Minimum ambient temperature	5 ºC
Number of pneumatic connections	8 pcs.
Pneumatic input connection	G 1/8

Specifications are subject to change without prior notice and any obligation on the part of the manufacturer.

SMC United Kingdom +34 945184126 sales@smc.uk

Mode of operation of drive	Double acting
Theoretical cylinder force, advance stroke (at 0.5 MPa)	804 N
Theoretical cylinder force, return stroke (at 0.5 MPa)	603 N
Maximum piston speed	300 mm/s
Type of cushioning	Rubber bumper on both ends
Minimum piston speed	50 mm/s
Non-rotating accuracy of plate	± 0.06 º
Lubrication	Not required (Non-lube)
Allowable rotational torque	1.59 N·m
Allowable lateral load	55.86 N
Weight	1.070 Kg

Specifications are subject to change without prior notice and any obligation on the part of the manufacturer.

SMC United Kingdom +34 945184126 sales@smc.uk

Dimensions

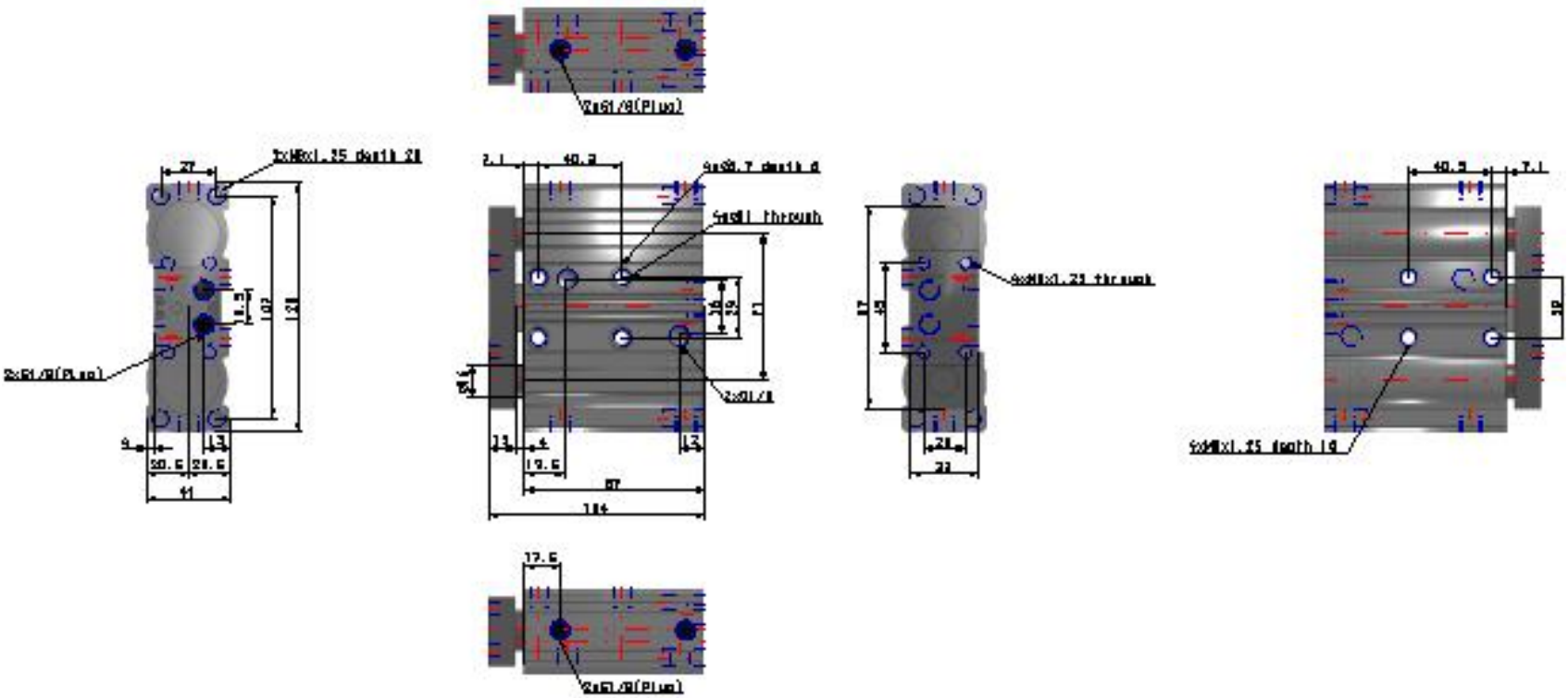

Specifications are subject to change without prior notice and any obligation on the part of the manufacturer.

Additional information

Catalogue	JMGP-D_EU.pdf

Specifications are subject to change without prior notice and any obligation on the part of the manufacturer.

SMC United Kingdom +34 945184126 sales@smc.uk