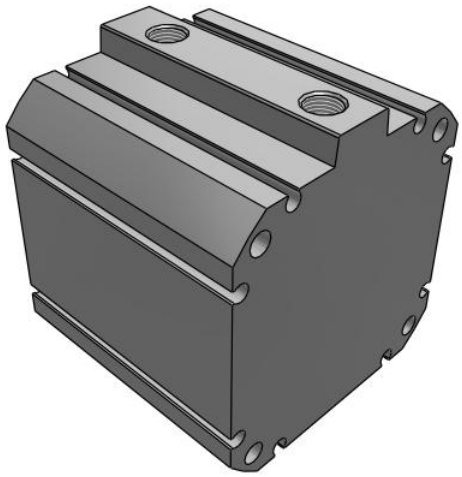

JC(D)Q, Compact Cylinder, Double Acting Single Rod
JCQ63-35

Datasheet

General series information

- Double acting, single rod, compact cylinder.
- Lightweight 25 g (ø12 stroke 5).
- Bore sizes (mm): 12 ~ 100.
- Strokes up to 50 mm.
- Bumper cushion.
- Auto switches can be mounted on 4 surfaces.

Double-acting, single-rod cylinder

Standard specifications

Magnet	None
Mounting	Through-hole (Standard)
Bore Size	63 mm
Port Thread Type	M thread: ø12 to ø40, Rc: 50 to 100
Stroke	35 mm
Auto Switch	No Switch
Lead Wire or Prewired Connector	0.5m (Or None in the Case of No Switch)
Number	2 pcs. (Or None in the Case of No Switch)
Pressure medium	Air
Maximum temperature of pressure medium	60 ºC
Minimum temperature of pressure medium	5 ºC
Maximum operating pressure	0.7 MPa
Minimum operating pressure	0.05 MPa
Proof pressure	1.0 MPa
Maximum ambient temperature	60 ºC
Minimum ambient temperature	5 ºC
Number of pneumatic connections	2 pcs.

Specifications are subject to change without prior notice and any obligation on the part of the manufacturer.

SMC CORPORATION Zuazobidea 14, 01012, Vitoria-Gasteiz, Álava +34 945184100 +34 945184126 www.smc.eu support.marketingeurope@smc.com

Pneumatic input connection	Rc 1/8
Theoretical cylinder force, advance stroke (at 0.5 MPa)	1559 N
Theoretical cylinder force, return stroke (at 0.5 MPa)	1431 N
Maximum piston speed	300 mm/s
Type of cushioning	Rubber bumper
Piston rod end	Female thread
Geometric form of the piston rod	Single rod
Minimum piston speed	50 mm/s
Lubrication	Not required (Non-lube)
Weight	0.606 Kg

Specifications are subject to change without prior notice and any obligation on the part of the manufacturer.

SMC CORPORATION Zuazobidea 14, 01012, Vitoria-Gasteiz, Álava +34 945184100 +34 945184126 www.smc.eu support.marketingeurope@smc.com

Dimensions

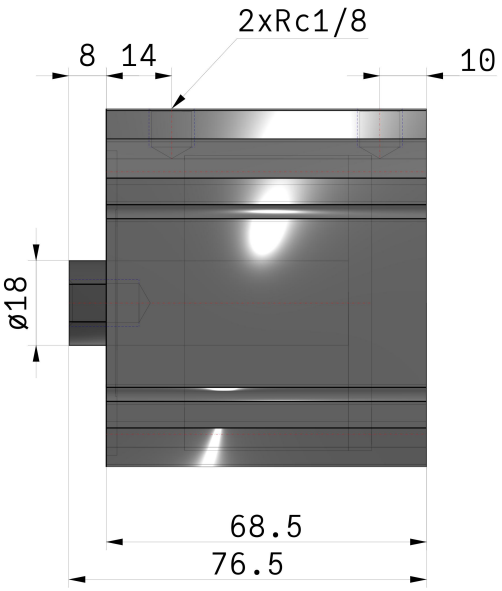

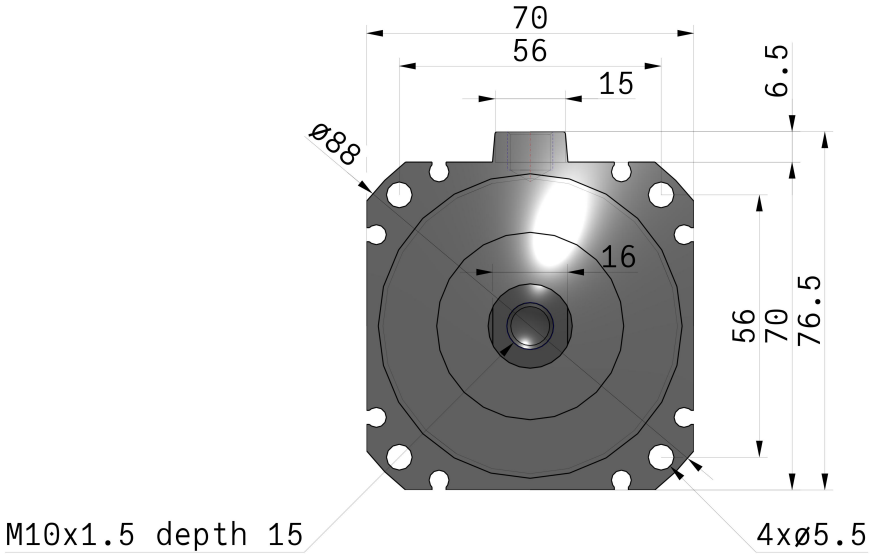

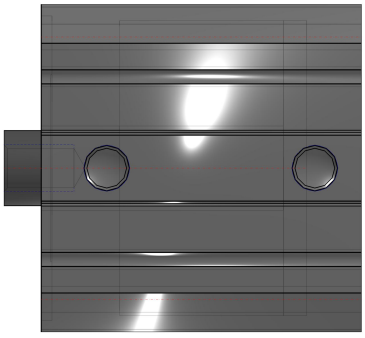

Specifications are subject to change without prior notice and any obligation on the part of the manufacturer.

SMC CORPORATION Zuazobidea 14, 01012, Vitoria-Gasteiz, Álava +34 945184100 +34 945184126 www.smc.eu support.marketingeurope@smc.com

Additional information

Catalogue JCQ-C_EU.pdf

Specifications are subject to change without prior notice and any obligation on the part of the manufacturer.

SMC CORPORATION Zuazobidea 14, 01012, Vitoria-Gasteiz, Álava +34 945184100 +34 945184126 www.smc.eu support.marketingeurope@smc.com