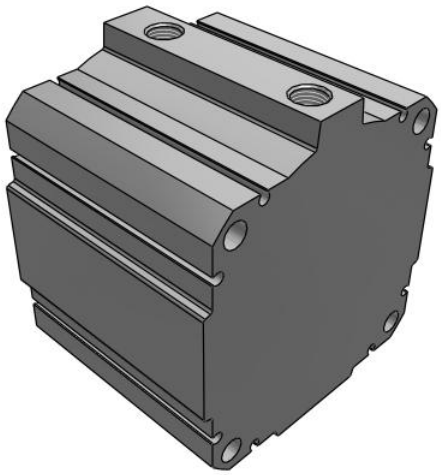

# JC(D)Q, Compact Cylinder, Double Acting Single Rod
## JCDQ100-40

Datasheet

## General series information

- Double acting, single rod, compact cylinder.
- Lightweight 25 g (ø12 stroke 5).
- Bore sizes (mm): 12 ~ 100.
- Strokes up to 50 mm.
- Bumper cushion.
- Auto switches can be mounted on 4 surfaces.

*Double-acting, single-rod cylinder*

## Standard specifications

| | |
|---|---|
| Magnet | D (Built-in) |
| Mounting | Through-hole (Standard) |
| Bore Size | 100 mm |
| Port Thread Type | M thread: ø12 to ø40, Rc: 50 to 100 |
| Stroke | 40 mm |
| Auto Switch | No Switch |
| Lead Wire or Prewired Connector | 0.5m (Or None in the Case of No Switch) |
| Number | 2 pcs. (Or None in the Case of No Switch) |
| Pressure medium | Air |
| Maximum temperature of pressure medium | 60 ºC |
| Minimum temperature of pressure medium | 5 ºC |
| Maximum operating pressure | 0.7 MPa |
| Minimum operating pressure | 0.05 MPa |
| Proof pressure | 1.0 MPa |
| Maximum ambient temperature | 60 ºC |
| Minimum ambient temperature | 5 ºC |
| Number of pneumatic connections | 2 pcs. |

*Specifications are subject to change without prior notice and any obligation on the part of the manufacturer.*



**SMC CORPORATION** Zuazobidea 14, 01012, Vitoria-Gasteiz, Álava +34 945184100 +34 945184126 www.smc.eu support.marketingeurope@smc.com

| | |
|---|---|
| Pneumatic input connection | Rc 1/4 |
| Theoretical cylinder force, advance stroke (at 0.5 MPa) | 3927 N |
| Theoretical cylinder force, return stroke (at 0.5 MPa) | 3662 N |
| Maximum piston speed | 300 mm/s |
| Type of cushioning | Rubber bumper |
| Piston rod end | Female thread |
| Geometric form of the piston rod | Single rod |
| Minimum piston speed | 50 mm/s |
| Lubrication | Not required (Non-lube) |
| Weight | 1.842 Kg |

Specifications are subject to change without prior notice and any obligation on the part of the manufacturer.



SMC CORPORATION Zuazobidea 14, 01012, Vitoria-Gasteiz, Álava +34 945184100 +34 945184126 www.smc.eu support.marketingeurope@smc.com

## Dimensions

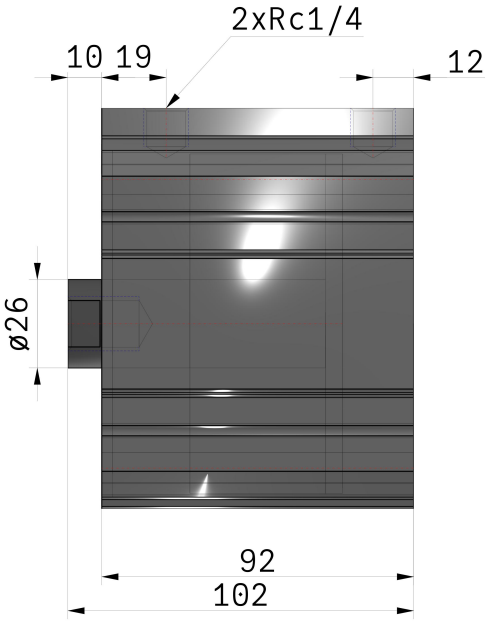


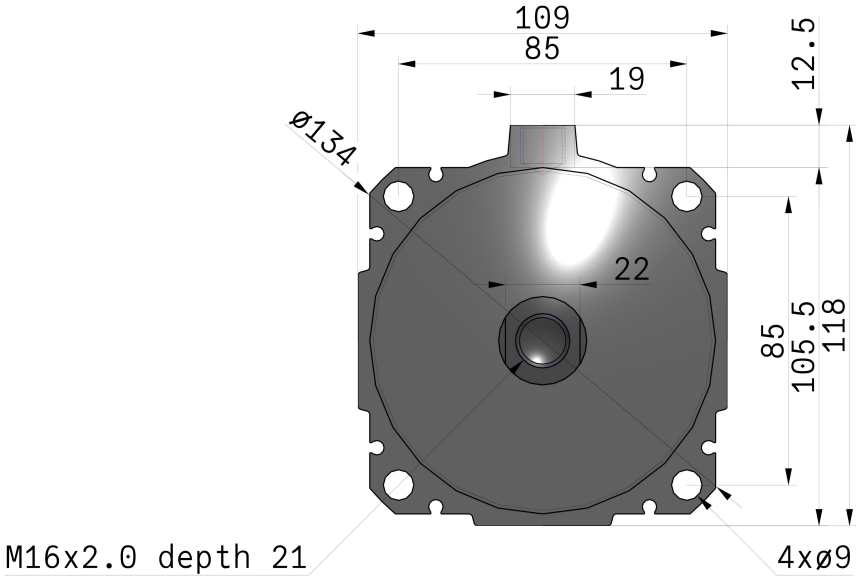


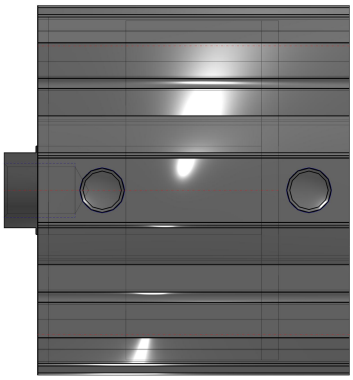

Specifications are subject to change without prior notice and any obligation on the part of the manufacturer.



SMC CORPORATION Zuazobidea 14, 01012, Vitoria-Gasteiz, Álava +34 945184100 +34 945184126 www.smc.eu support.marketingeurope@smc.com

## Additional information

Catalogue JCQ-C_EU.pdf

Specifications are subject to change without prior notice and any obligation on the part of the manufacturer.



SMC CORPORATION Zuazobidea 14, 01012, Vitoria-Gasteiz, Álava +34 945184100 +34 945184126 www.smc.eu support.marketingeurope@smc.com